OWNER'S MANUAL

AKORN®

Model #E56720

Keep your receipt with this manual for Warranty.

CUSTOMER SERVICE
1-912-638-4724
Service@CharGriller.com

Contents of this manual are Trademarked and Copyrighted by Char-Griller | A&J Manufacturing. Using the information contained in this manual without consent of Char-Griller and/or A&J Manufacturing is strictly prohibited.

OM_E56720_ED_ C.4

TABLE OF CONTENTS

Safety Warnings & Warranty.....A-1
Assembly Instructions B-1
Product Usage C-1
Recipes D-1
Accessories E-1

IMPORTANT SAFETY WARNINGS

READ ALL SAFETY WARNINGS AND INSTRUCTIONS CAREFULLY BEFORE ASSEMBLING AND OPERATING YOUR GRILL

Read the following instructions carefully and be sure your appliance is properly assembled, installed, and maintained. Failure to follow these instructions may result in serious bodily injury and/or property damage. If you have any questions concerning assembly or operation, call 912-638-4724.

- Use caution when assembling and operating your grill to avoid scrapes or cuts from sharp edges.
- Do not use gasoline, kerosene or alcohol for lighting charcoal. Use of any of these or similar products could cause an explosion possibly leading to severe bodily injury.
- Do not used lighter fluid on already lit coals.
- Keep children & pets away from grill. Supervision is necessary and do not leave grill unattended when in use.
- Use caution when moving grill to prevent strains.
- Keep grill at least 15 feet from any combustible material (decks, buildings, fences, trees, bushes, etc).
- When adding charcoal and/or wood, use extreme caution.
- Never move grill when it is in use or when it contains hot coals or ashes, keep the grill in a level position at all times while in use.
- ALWAYS latch lid when lid is in closed position.
- Do not place grill near flammable liquids, gases or where flammable vapors may be present.
- When opening grill, first open slightly to let a small amount of air in for a few seconds. This prevents large amounts of oxygen from getting to suffocated coals which may cause dangerous flash back.
- Use caution since flames can flare-up when fresh air suddenly comes in contact with fire. When opening the lid, keep hands, face and body safe from hot steam and flame flare-ups.
- Removing excess fat before cooking will help prevent flare-ups.
- Keep your grill clean to help prevent flare-ups.
- Always put charcoal on top of the fire grate and not directly into the bottom of the grill.

WARNING: FUELS USED IN WOOD OR CHARCOAL BURNING APPLIANCES, AND THE PRODUCTS OF COMBUSTION OF SUCH FUELS, CAN EXPOSE YOU TO CHEMICALS INCLUDING CARBON BLACK, WHICH IS KNOWN TO THE STATE OF CALIFORNIA TO CAUSE CANCER, AND CARBON MONOXIDE, WHICH IS KNOWN TO THE STATE OF CALIFORNIA TO CAUSE BIRTH DEFECTS OR OTHER REPRODUCTIVE HARM. *For more information go to: www.P65Warnings.ca.gov.*

ADVERTENCIA: LOS COMBUSTIBLES USADOS EN EQUIPOS PARA QUEMAR MADERA O CARBÓN, ASÍ COMO LOS PRODUCTOS DE TAL COMBUSTIÓN, PUEDEN EXPONERTE A SUSTANCIAS QUÍMICAS, ENTRE ELLAS EL NEGRO DE HUMO Y EL MONÓXIDO DE CARBONO, QUE EL ESTADO DE CALIFORNIA RECONOCE COMO CAUSA, RESPECTIVAMENTE, DE CÁNCER Y DE MALFORMACIONES CONGÉNITAS Y OTROS DAÑOS AL SISTEMA REPRODUCTOR. *Para más información, visite www.P65Warnings.ca.gov*

IMPORTANT SAFETY WARNINGS
(Continued)

- Do not exceed a temperature of 700˚ F.
- Do not allow charcoal and/or wood to rest on the walls of grill. Doing so will greatly reduce the life of the grill
- Always wear oven mitts to protect hands from burns, especially when adjusting dampers. Avoid touching hot surfaces.
- When opening lid, make sure it is pushed all the way back so it rests against the lid support bracket. Use extreme caution as hood could fall back to a closed position and cause bodily injury.
- Close lid and all dampers to help suffocate flame.
- Always hold an open lid from the handle to prevent it from closing unexpectedly.
- Never leave coals and ashes unattended. Before grill can be left unattended, coals and ashes must be removed. Use caution to protect yourself and property.
- Carefully place remaining coals and ashes in a noncombustible metal container and saturate completely with water. Allow coals and water to remain in metal container 24 hours prior to disposing.
- To protect against bacteria that could cause illness, keep all meats refrigerated and thaw in refrigerator or microwave. Keep raw meats separate from other foods, and wash everything that comes in contact with raw meat.
- Cook meat thoroughly, and refrigerate leftovers immediately.
- Use a calibrated food thermometer and the USDA guidelines to ensure that meat, poultry, seafood, and other cooked foods reach a safe minimum internal temperature.
- Grill is for use outdoors and in well-ventilated areas, only.
- Always have a fire extinguisher near at all times. Maintain and check your fire extinguisher regularly.

STOP! CALL FIRST!

Do NOT Return Product to Store.

This grill has been made according to the highest of quality standards. If you have any questions that are not addressed in this manual or if you need parts please call our Customer Service Department at 1-912-638-4724 (USA) or email Char-Griller at: Service@CharGriller.com and have your serial number handy.

Document Your Grill Model and Serial Numbers HERE:
(Model and Serial number are located on the back of the grill body or on the leg.)

_____ _____

(MODEL #) **(SERIAL #)**

(example)

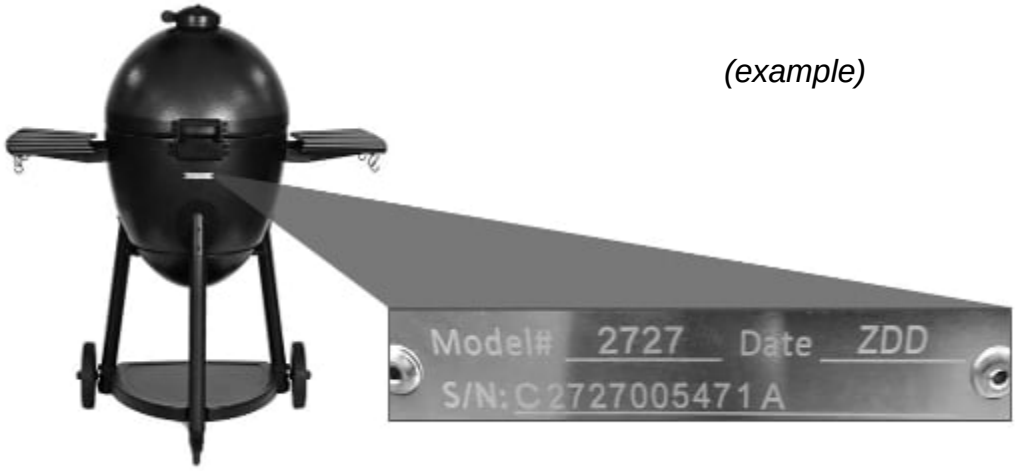

REGISTER YOUR GRILL:

To take full advantage of the Char-Griller warranty be sure to register your grill by visiting **www.CharGriller.com/Register** or calling Customer Service at **1-912-638-4724**.

Registration provides important protections:

1. In the extremely unlikely event of a product recall Char-Griller can easily contact you and rectify the issue.
2. If a warrantied part is broken or missing we can send you the needed parts promptly.

NOTE: You will need your model #, serial number, and a copy of the original sales receipt when registering.

WARRANTY INFORMATION

A COPY OF THE DATED PROOF OF PURCHASE (RECEIPT) IS REQUIRED WHEN REGISTERING OR SUBMITTING A WARRANTY* CLAIM. PLEASE RETAIN A COPY OF THE RECEIPT FOR YOUR RECORDS.

Char-Griller will replace any defective part of its grillers/smokers, under warranty, as outlined below.

PLEASE READ THIS INFORMATION IN DETAIL AND IF YOU HAVE ANY QUESTIONS CONTACT CUSTOMER SERVICE AT 912-638-4724 OR SERVICE@CHARGRILLER.COM.

Charcoal / Pellet / Kamado Grills	
Grill - Hood AND Bottom (excludes removable Ash Pan)	5 years from date of purchase for rust through / burn through
Ash Pan AND Defective Parts	1 year from date of purchase
Gas Grills	
Grill Hood (TOP half) AND Main Burner Tubes (exckudes Side Burner)	5 years from date of purchase for rust through / burn through
Grill Body (BOTTOM half) AND Side Burner AND Defective Parts	1 year from date of purchase
Dual Fuel Grills (Gas & Charcoal)	
Charcoal Grill - Hood AND Bottom AND Gas Grill Hood (TOP half) AND Main Burner Tubes (excludes Ash Pan and Side Burner)	5 years from date of purchase for rust through / burn through
Ash Pan AND Defective Parts AND Gas Grill Body (BOTTOM half) AND Side Burner	1 year from date of purchase
Parts, Accessories, and Grill Covers	1 year from date of purchase (seam tears only for covers)

SURFACE RUST IS NOT CONSIDERED A MANUFACTURING OR MATERIALS DEFECT

Char-Griller grills are made of steel and if exposed to the elements rust will occur naturally. Please refer to the section entitled, “Usage” to review how to care for your grill properly.

Surface issues such as scratches, dents, corrosion or discoloring by heat, abrasive and chemical clearers, surface rust or the discoloration of steel surfaces are NOT covered under these warranties.

Warranties are for the replacement of defective parts only. Char-Griller is not responsible for damage resulting from accident, alteration, misuse, abuse, hostile environments, improper installation, and installation not in accordance with local codes of service of unit.

Excluded Under ALL Warranties
Paint; Surface Rust; Heat Damage; Incorrect Parts ordered by customer, including shipping; Worn Parts; Missing or damaged parts not reported within two (2) months of purchase date; Defective parts not reported within one (1) year of purchase date; Fading grill cover.

*NOTE: For warranty claims, photos and prepaid return of the item in question may be required. Misuse, abuse or commercial use nullifies all warranties.

ASSEMBLY INSTRUCTIONS

Parts List

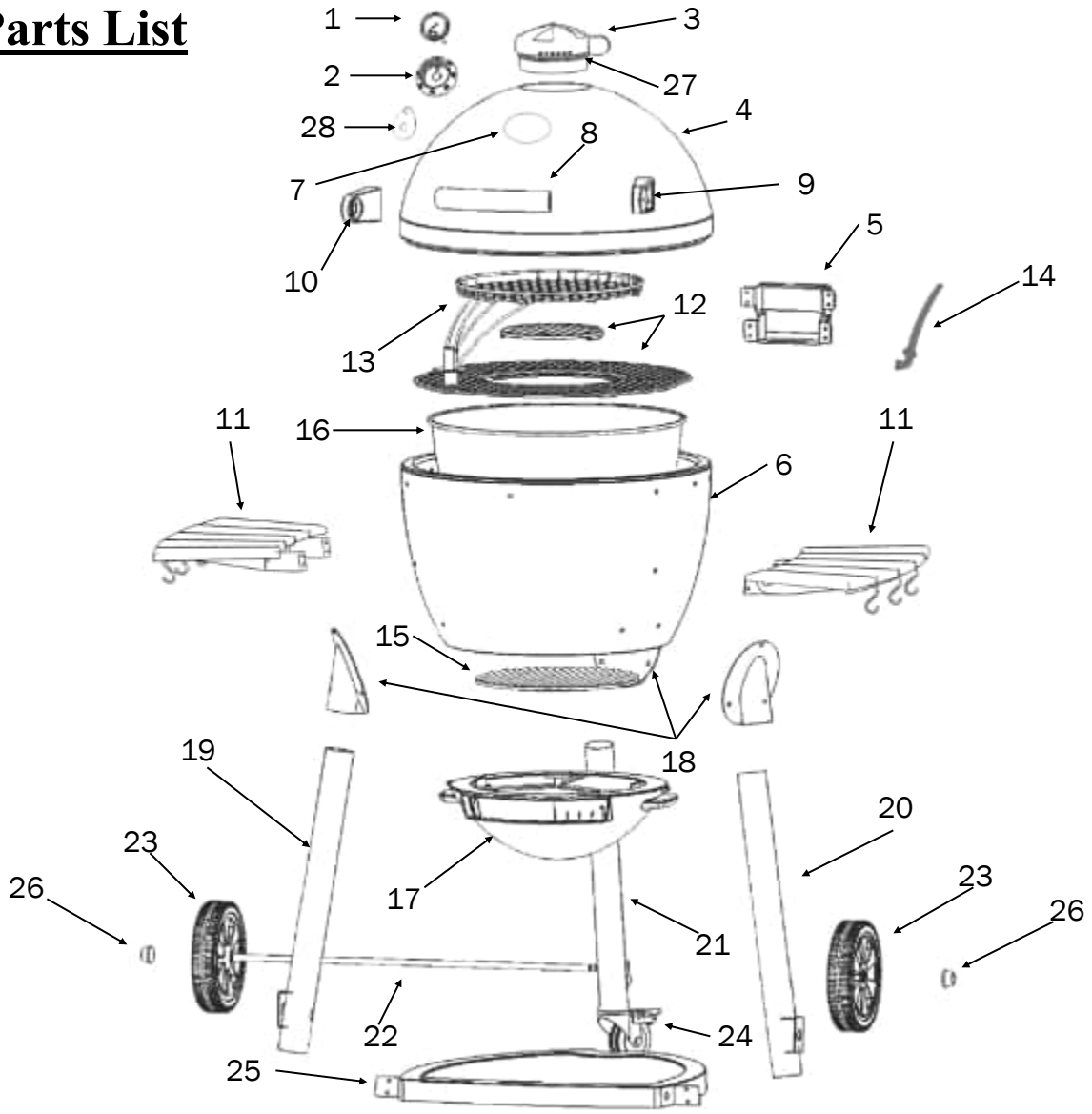

Parts List

Item	QTY.	Part Name
1	1	THERMOMETER
2	1	BEZEL
3	1	STACK DAMPER
4	1	HOOD
5	1	HOOD HINGE
6	1	GRILL BODY
7	1	LOGO PLATE
8	1	HOOD HANDLE
9	1	RIGHT HANDLE BRACKET
10	1	LEFT HANDLE BRACKET
11	2	SIDE SHELF
12	1	COOKING GRATE SET
13	1	WARMING RACK
14	1	GRATE LIFTER

Item	QTY.	Part Name
15	1	FIRE GRATE
16	1	FIRE BOWL
17	1	ASH PAN
18	3	LEG BRACKET
19	1	LEFT FRONT LEG
20	1	RIGHT FRONT LEG
21	1	REAR LEG
22	1	AXLE
23	2	WHEEL, 8 INCH
24	1	WHEEL, 3 INCH CASTER
25	1	BOTTOM SHELF
26	2	HUB CAP
27	1	O-RING
28	1	THERMOMETER GASKET

HARDWARE LIST AND TOOLS REQUIRED

(Tools Not Included) **7/16" nut driver**

Hardware: Pack:

¼-20X½" HEX BOLT…….26 PCS

¼-20x3/4" HEX BOLT WITH THREAD LOCKING COMPOUND …….4 PCS

¼-20 SHOULDER BOLT…….4 PCS

2/5" FLAT WASHER…….....2 PCS

1/4" LOCK WASHER….11 PCS

¼-20 HEX NUT…….....4 PCS

HAIR COTTER PIN…....2 PCS

UTENSIL HOOK…….....6 PCS

Step 1

Place GRILL BODY upside down and install LEG BRACKETS with three (3) ½ inch hex bolts each. Next install LEGS (3) with two (2) ½ inch hex bolts and two 1/4 inch lock washers each into LEG BRACKETS, DO Not Tighten Bolts Until After Step #3. Screw CASTER onto rear leg, lock CASTER before tightening. Make Sure the leg with the caster is in the back and wheel support braces on the front legs are facing outward.

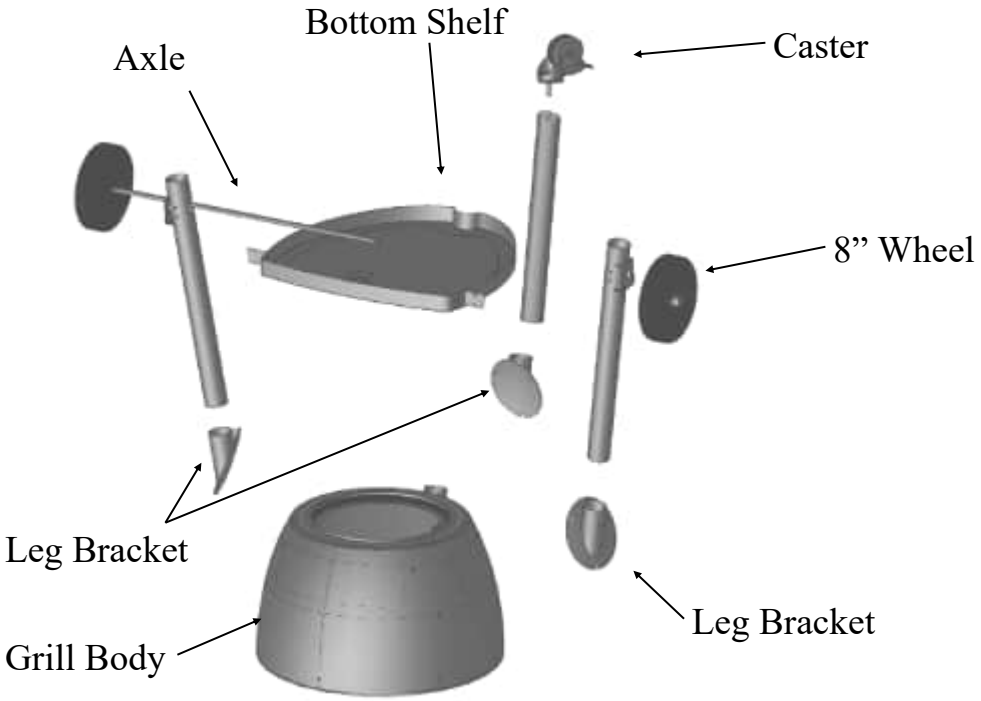

Step 2

Attach BOTTOM SHELF to LEGS with five 1/2 inch hex bolts and lock washers.

Step 3

Insert AXLE through front LEGS and BOTTOM SHELF. Tighten all bolts.

Step 4

Install one WASHER, COTTER PIN and HUB CAP onto the AXLE then slide the AXLE through WHEELS and legs as shown. Finish by attaching 2nd WASHER, COTTER PIN and HUB CAP.

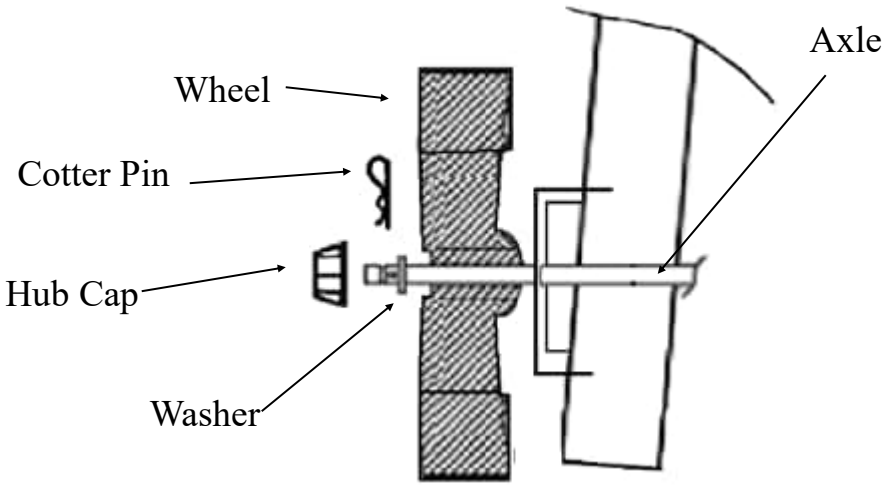

Step 5

Turn grill upright, LOCK CASTER and place HOOD on the GRILL BODY. Attach hinge on back of HOOD to GRILL BODY using four (4) 3/4 inch hex bolts with thread locking compound.

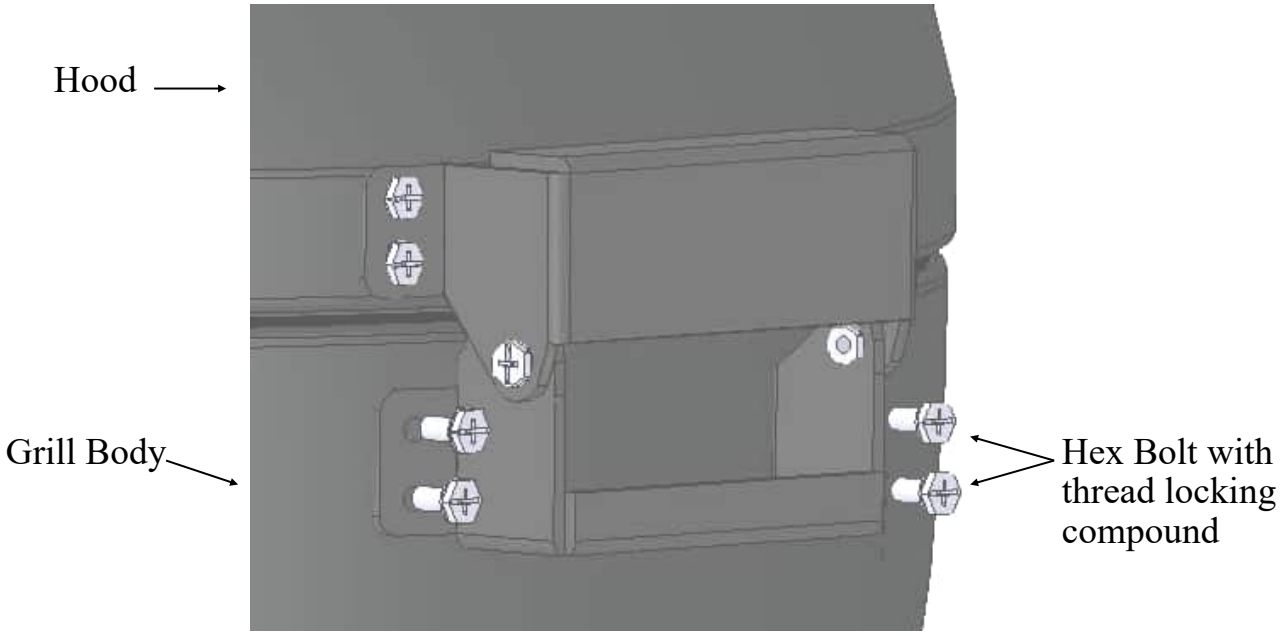

Step 6

Attach FRONT HANDLE to HOOD with four (4) 1/2 inch hex bolts. First attach one HANDLE BRACKET to the Lid and then hold the HANDLE in place while attaching the other HANDLE BRACKET to the Lid. HANDLE BRACKETS are left and right handed.

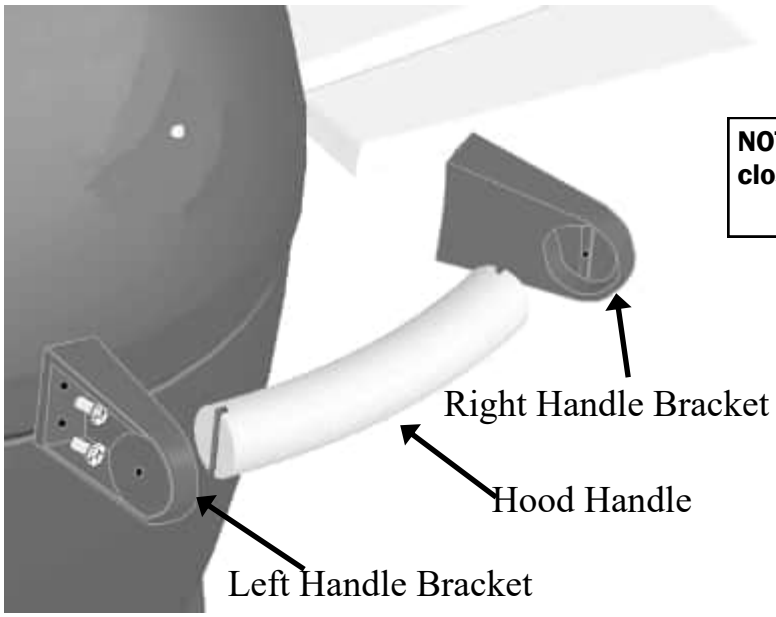

NOTE: Always latch lid when lid is in the closed position, especially while moving.

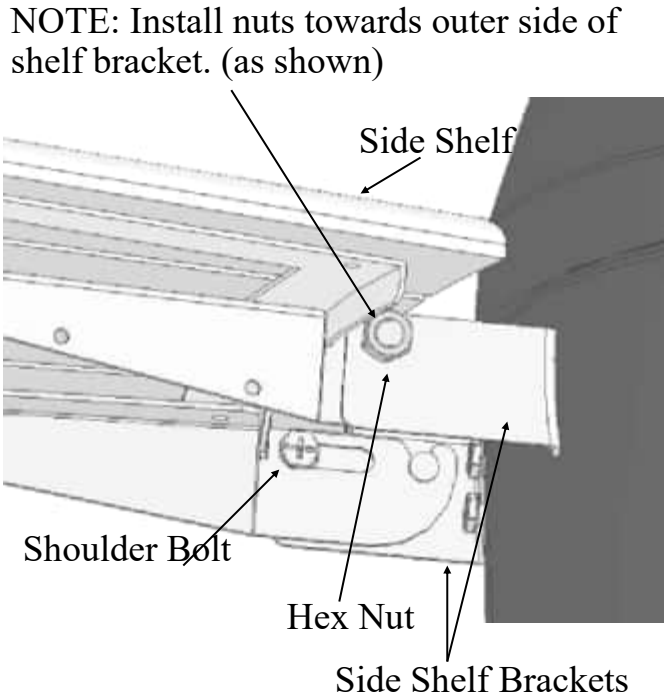

Step 7

Attach SIDE SHELVES to SIDE SHELF BRACKETS using two (2) shoulder bolts and two (2) hex nuts for each shelf.

Step 8

To install ASH PAN, hold ASH PAN up against the bottom of the GRILL BODY from the front with the center pin on the inside. Slide the ASH PAN back and use clips on the sides of the grill to snap into position as shown.

Step 9

Position O-Ring on bottom of damper by rolling it up to the bead. With O-Ring in position, install DAMPER with two (2) 1/2 inch bolts from inside the HOOD. Damper coating will scratch with use. This does not affect the function or performance of the damper. Next, install THERMOMETER GASKET, THERMOMETER, and BEZEL with wing nut, as shown below.

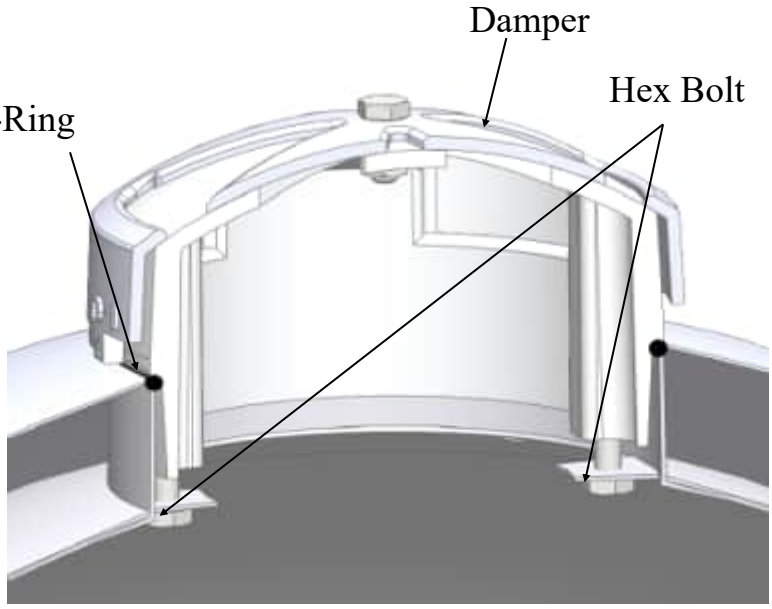

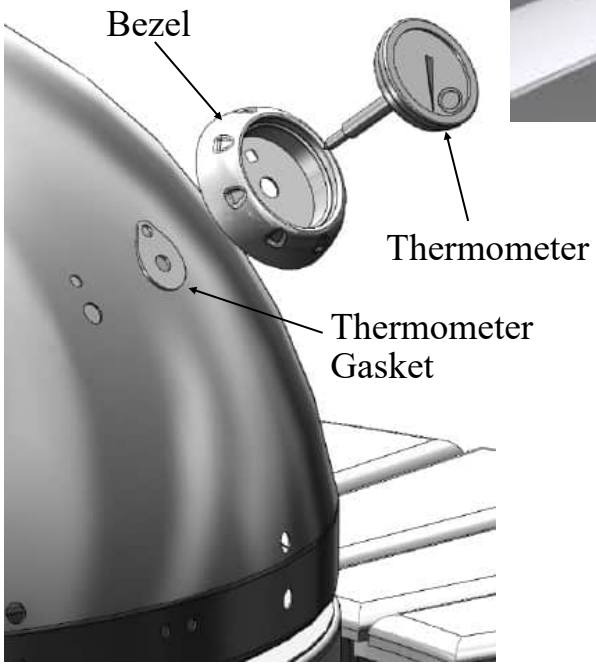

NOTE: Heat Gauge:
This heat gauge is accurate to +/- 10% of the actual temperature. We suggest verifying this with your oven. You will not be able to adjust / calibrate the AKORN heat gauge, but you will be knowledgeable as to its degree of accuracy.

If you require precise temperature control, we recommend using a digital meat thermometer.

Step 10

Install: FIRE BOWL, FIRE GRATE, COOKING GRATES and WARMING RACK inside of the lower body.

Step 11: Attach six (6) UTENSIL HOOKS to the underside of the two side shelves (3 each). Use depressions in the wood as a starting point for screwing in the UTENSIL HOOKS.

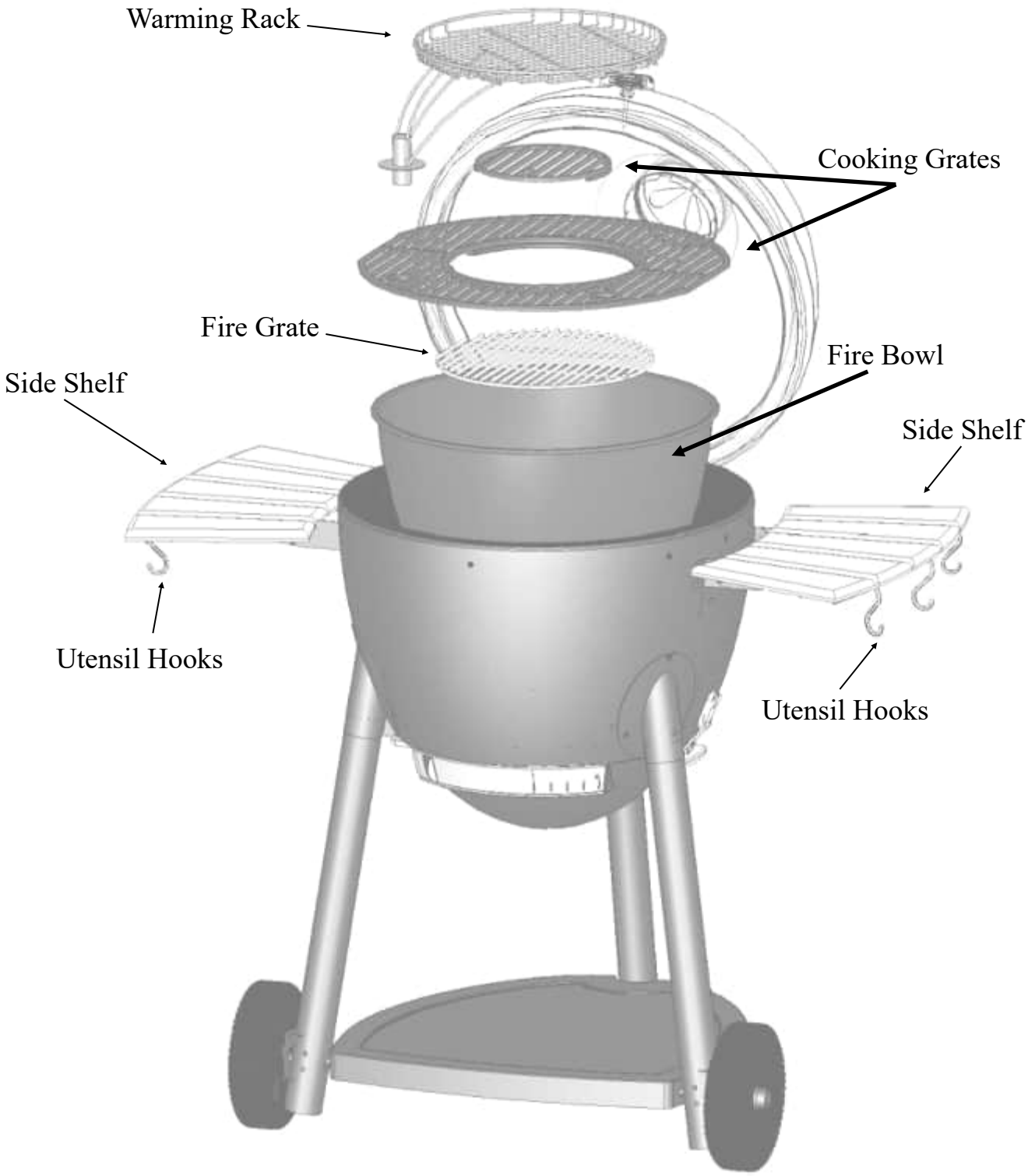

OPERATING INSTRUCTIONS

Setting Up

Set grill up on solid, flat surface with adequate wind shelter. Do not move grill while hot, and do not leave unattended during operation.

This appliance is designed for use outdoors, away from any flammable materials. It is important that there are no overhead obstructions and that there is a minimum distance of 15 feet (366 cm) from the side or rear of the appliance. It is important that the ventilation openings of the appliance are not obstructed. The barbecue must be used on a level, stable surface. The appliance should be protected from direct drafts and positioned or protected against direct penetration by any trickling water (e.g. rain).

**** PLEASE NOTE: NO RETURNS ON USED GRILLS ****

Seasoning and Preparing the Grill

IMPORTANT! BEFORE YOU USE YOUR GRILL FOR THE FIRST TIME YOU MUST SEASON THE CAST IRON COOKING GRATE.

Before you use your grill it is important to season it. Seasoning will burn off coating used to protect your grill during shipping and help protect your cast iron grates from rusting while preparing them for use.

1. Wash your cooking grates in warm soapy water.
2. Rinse thoroughly and dry completely with a towel. DO NOT AIR DRY. NEVER PUT YOUR COOKING GRATE OR ANY PART OF YOUR GRILL IN YOUR DISHWASHER.
3. Once your cooking grate is dry apply a coating of vegetable oil or shortening to your cooking grate, be sure to coat both sides thoroughly.
4. Build a medium sized fire on the fire grate. Always put charcoal on top of the fire grate and not directly into the bottom of the grill. For best results, we recommend using Lump Charcoal.
5. After coals ash over, spread out coals, replace cooking grates, close lid and heat at approximately 400° F for an hour. This process will burn off any residue left from shipping and manufacturing as well as season your cast iron cooking grate.
6. Seasoning should be done periodically to lengthen the life of your cooking grate.

TIP: Clean grates while warm using gloves and a baseball-sized aluminum foil ball.

Lighting Instructions

We recommend using Lump Charcoal because it contains no additives or fillers. This makes for more efficient burning, less ash and better tasting food than charcoal briquettes.

1. To start a charcoal fire, stack 3 lbs of Lump Charcoal (50-60 briquettes) into a pyramid in the center of the fire grate.

2. Light coals in several places. Fire starters are helpful during this step.
   NOTE: Do not use gasoline, kerosene or alcohol for lighting charcoal. Use of any of these or similar products could cause an explosion possibly leading to severe bodily injury.

3. Leave lid open until coals are ignited and smoke burns white with no flames.

4. After coals are lit but before they turn white, start regulating internal dome temp with dampers. (Or, if you wish, begin grilling.)

Temperature (°F)	Type of Meat / Cooking	Top Damper	Bottom Damper
200-225	Smoking	●	▬
300	Chicken Tenders Grilling Burgers and Ribs	◑	▬
325	Poultry and Turkey Breast	◑	▬
350	Roast Beef and Pork	●	▬
450+	Searing Steaks	○	▬

● CLOSED ○ OPEN

MORE AIR FLOW MEANS MORE HEAT.
Refer to the chart above to help control the temperature in your AKORN grill.

NOTE: Do not let temperature go higher than desired temp because it is harder to bring temperature down than to go up.

ALWAYS FOLLOW CHARCOAL AND LIGHTER FLUID MANUFACTURERS' INSTRUCTIONS AND WARNINGS. USE OUTDOORS ONLY ON NONCOMBUSTIBLE SURFACE – 12' AWAY FROM WOOD AND COMBUSTIBLE MATERIAL.

Grill Operation & Tips

- Control heat with amount and type of fuel, dual dampers, and (optional) adjustable fire grate. Wood burns hotter than coals and more airflow equals more heat.
- Add water soaked hardwood chips for a smoked flavor.
- Ashes left in bottom too long hold moisture and will rust through any thickness of steel. This grill is made of steel and cast iron, which WILL RUST, ESPECIALLY IF NOT PROPERLY CARED FOR.
- Do not use self-starting charcoal as it will give unnatural flavor. Burn lighter fluid completely before closing lid.
- After each use, coat vegetable oil on the interior grates to reduce rust.

For LOW, SLOW and LONG grilling & Smoking (200° to 350° F)

Use approx one pound of computer mouse size or larger size pieces of LUMP CHARCOAL to build fire in center of fire grate. Start fire as described above. When coals ignite, CLOSE LID and begin to regulate temp with dampers to desired setting.

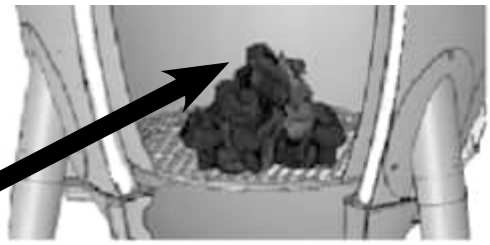

Light charcoal pile on TOP for low fire temperature

For HIGH Temp SEARING & grilling (350° to 650° F)

Use approx two - three pounds of mostly smaller golf ball size pieces of LUMP CHARCOAL than normally to build fire in center of fire grate. Start fire as described above. When coals ignite, CLOSE LID and begin to regulate temp with dampers to desired setting.

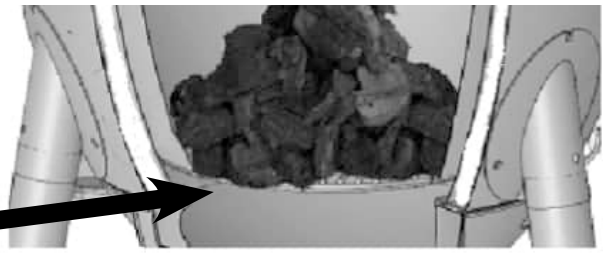

Light charcoal pile on BOTTOM for high fire temperature

For Smoking:

1. Follow instructions for lower temperature cooking (350˚F and below).
2. Pre-soak wood chips for 35 minutes. Soak chunks for 1 hour and 30 minutes, or until wood is completely saturated.
3. After grill has reached desired temperature, sprinkle two handfuls of soaked wood chips or chunks over the lit charcoals.
4. Let the chips begin to smoke by closing the lid.
5. You can begin cooking after a few minutes. More soaked chips may be added to the fire later if necessary,

Heat Gauge:

This heat gauge is accurate to +/- 10% of the actual temperature. We suggest verifying this with your oven. If you require more precise temperature control, the use of a meat thermometer is recommended.

NOTE: Smoke may escape from areas other than the smokestack. This should not affect cooking.

NEVER EXCEED 700°F BECAUSE THIS WILL DAMAGE THE FINISH AND CONTRIBUTE TO RUST.
PAINT IS NOT WARRANTED AND WILL REQUIRE
TOUCH-UP. THIS UNIT IS NOT WARRANTED AGAINST RUST.

Cooking with INDIRECT Heat on a Kamado:

Smokin' Stone™ and Pizza Stones are sold separately at **CharGriller.com.**
Both Stones can be used interchangably.

Smokin' Stone, Grate, Drip Pan & Meat Rack
This is ideal for ROASTING large cuts of meat (low and slow). The meat stays flavorful and juicy as it slowly roasts and is basted in it's own juices. Add apple juice or beer to drip pan if desired.

Place Smokin' Stone™ on the three handles near the top of the Fire Bowl; followed by the Cooking Grate, a Drip Pan (any shallow aluminum pan will work), and a Meat Rack (sold separately).

Smokin' Stone, Drip Pan, Grate & Meat Rack
This is another method of INDIRECT cooking. Also ideal for ROASTING large cuts of meat and ribs, this method catches the meat's drippings below the grate.

Smokin' Stone, Drip Pan & Meat Rack
This is a third method of INDIRECT cooking and an excellent way to cook large turkeys, chicken or other fowl.

Grate, Pizza Stone, Drip Pan & Meat Rack
Pizza Stone can be used as a Smokin' Stone™ when placed on the Cooking Grate; with a Drip Pan on top of the Pizza Stone; then with a Meat Rack placed inside of the Drip Pan.

Visit CharGriller.com to purchase AKORN accessories.

Finishing Up

When your are finished grilling you can shut down your grill by closing both dampers and allowing the fire to suffocate. Be patient. This make take an hour or more.

Emptying the Ashes:

**** ONLY EMPTY ASHES WHILE GRILL IS NOT IS USE ****

After the fire is completely extinguished you should wait several hours before emptying the ashes to ensure they are not still hot and a burn hazard.

1. Knock any ashes that did not fall into the ash pan from the fire grate. (If there are pieces of partially burned charcoal on the fire grate you can save them for next time. They are still good).
2. Tap the sides of the fire bowl to knock loose any ash that is on the sides.
3. Unclip the ash pan from the bottom of the grill and slide out towards the front.
4. Give the ash pan a few firm taps to loosen any ash that may be stuck.
5. Place the ashes in a metal container and cover with water to ensure there are no lit coals then you can dispose of the ashes.

IMPORTANT: Charcoal is porous and holds moisture. DO NOT leave charcoal in your grill while you are not using it. Charcoal and ashes leftinside the ash pan may reduce the life of your grill.

This Page Intentionally Left Blank

GRILLING RECIPES

Know Your Cuts of Meat

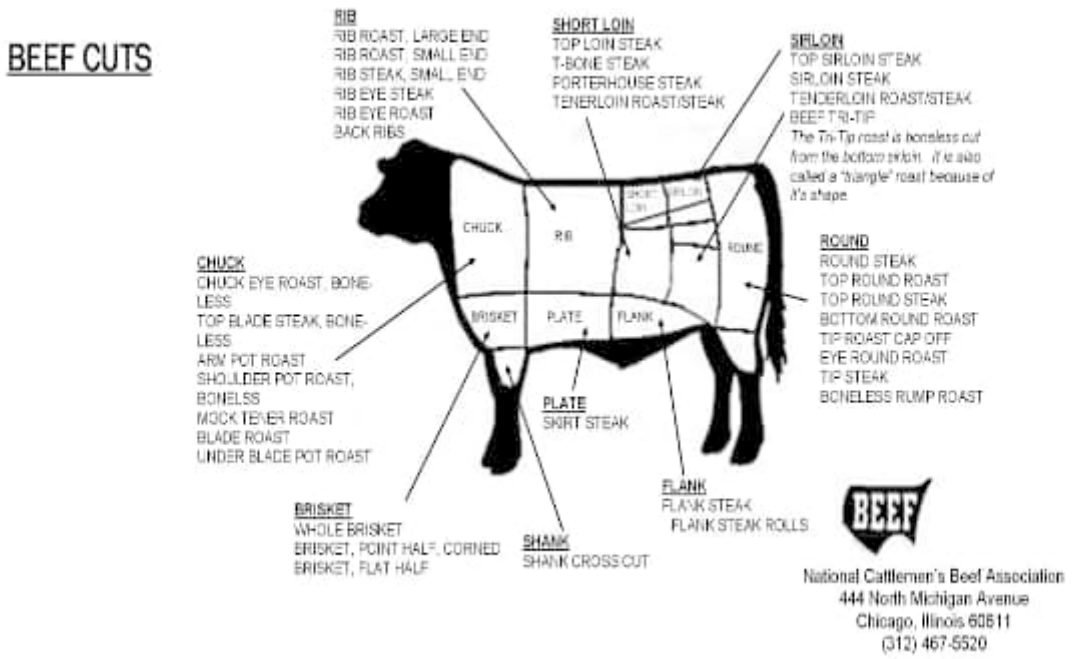

PORK CUTS

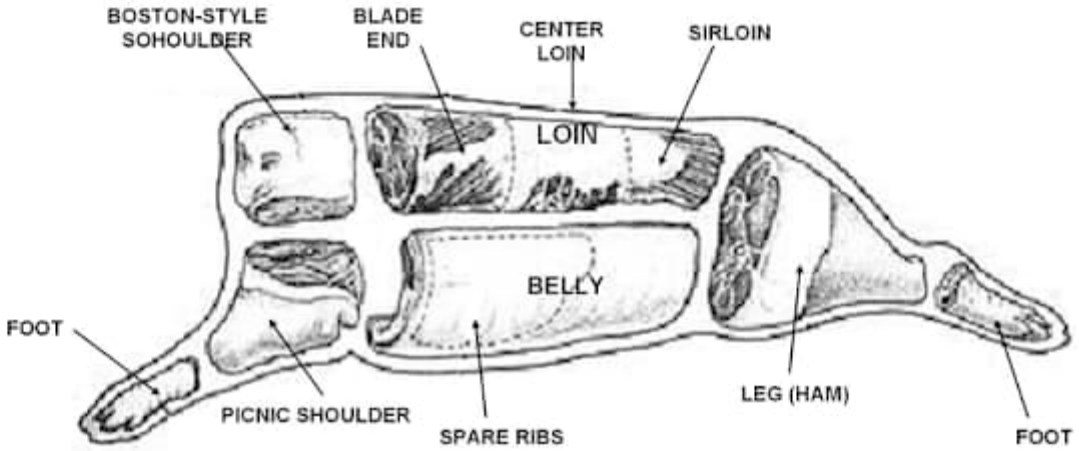

TIPS FOR AKORN GRILLING
(Direct Heat Above Coals)

- Leave grill Lid down while cooking to eliminate flare ups & to provide even cooking
- Add wood chips for flavor. When smoking, soak chips in water for 40 mins. prior to placing in the grill
- Meat Thermometers give internal temperatures for rare, medium or well done. WHen testing temperatures, insert the probe into thickest part of meat.
- If using a WIRED digital thermometer, we suggest running the probe's wire thru the top damper so it's not necessary to open lid to read the meat's temperature. Opening the lid adds extra smoking time.
- Over cooking causes the meat to dry out
- Damper adjustments lowers or raises heat. Remeber, more air equals higher temperature.
- EASIEST TEMPERATURE SETTING: Open bottom damper and only adjust the top damper. Opening or closing the top damper ¼" generally adjusts the temperature up or down approximately 25°F.
- To lower the temperature: Close both dampers & open lid intermittently to release the hot air. Additionally, you can hand spray a little cold water on the coals to reduce the temperature faster.
- Closing both dampers after cooking will extinguish the fire and preserve some charcoal for next time.
- LUMP CHARCOAL is recommended as fuel because it lights faster, burns hotter, cleaner, adds flavor, has less ash clean up, lasts longer (18 to 24 hrs) and you can use less lump charcoal than briquettes.
- In order to avoid unnatural after-taste on your food, do not use lighter fluid. Rather, use an electric starter or fire starters.
- When cooking at high temperature, open lid slowly or open top damper 10 seconds before opening to avoid fireball or flash back.
- Bring meats to room temp before cooking.
- When starting fire, after coals are lit but before they turn white, you can close the lid and start regulating dampers to control internal dome temperature.

STEAKS

- Trim excess fat and apply a dry rub to both sides of steaks.
- Sear 1 ½ inch steaks on the AKORN™ directly over the coals for 2 or 3 minutes at 650° F.
- Flip the steaks and grill for another 2 or 3 minutes.
- Flip steaks again and shut both top and bottom dampers and let steaks remain on grill for another 3 or 4 minutes before removing.
- Internal meat temperatures: 145° F - Med Rare; 160° F -Med; 170° F -Well Done.

Dry Rub Seasoning:

- Mix 1/8 cup kosher salt
- ¼ tsp white pepper
- 1/8 tsp cayenne pepper
- 1 tsp black pepper
- Apply to both sides.

Steak Marinade:

In a glass pan mix:

- ½ cup olive oil
- 1/3 cup soy sauce
- ¼ cup wine vinegar
- 2 tsp lemon juice
- 1 tsp dry mustard
- 1 minced garlic clove
- small minced onion
- ¼ tsp pepper

Place the meat in the marinade and refrigerate for 3 hours.

BURGERS:

Grill ½ lb Burgers exactly the same as Steaks **EXCEPT...** grill for 2 minutes before each flip.

Char-Griller "Special" Burger: For a special burger treat, mix hamburger with Meat Magic®, Worcestershire sauce, ketchup, kosher salt, ground pepper, chopped onions & let sit for 20 minutes at room temperature.

HAMBURGER (or, really <u>any</u> meat!) MARINADE:

- Combine 1 cup soy sauce
- 2 coarsely chopped large onions
- 2 cloves garlic (halved)
- Place in an electric blender; cover, process at high speed for 1 minute or until mixture is smooth.
- Stir in ¼ cup bottle gravy coloring (Kitchen Bouquet®& Gravy Master®)
- 2 tsp Beau Monde seasoning (or substitute 1tsp MSG & 1tsp seasoned salt)
- Marinate meat at room temp for 2 hrs or refrigerate up to 24 hrs in a covered dish.
- Bring meat to room temp before cooking.

RACK OF LAMB:

A typical rack of lamb is 8 bones and weighs 1 1/2 to 2 pounds. A single rack of lamb is perfect for two people. A big investment, but a fantastic meal. Bottom end has a thick, round piece of meat, which on the rack is like a long, thin roast. Once cut it is like a small pork chop. Ask your butcher to remove the thin skin from outside of the rack & cut off the chine bone to make it easier to carve.

Preparation:

- Wrap bare long bones sticking up from rack with foil (to avoid crusting). Do not overcook or cook at too high a temperature because these bones can burn and crumble. Keep the bones up, away from the fire by placing in a "U" Rack.
- Remove loose pieces of fat. Dry with paper towel & season with mustard, salt, pepper & garlic

- Sear lamb quickly over hot fire at 500° F for 3 mins per side then drop heat and/or move the rack to a cooler part of the grill to let center roast. This creates a perfect caramelized crust and keeps the center tender and juicy.
- Close lid and let sit for another 5 minutes.
- Test internal temperature as you go. Do not overcook. Lamb is rare at 120° F; medium 150° F
- Remove from grill and tent under foil for 10 mins before carving (this is called, “Resting”). The rack will continue to cook and increase a couple degrees on the inside while resting.
- To carve the rack of lamb, stand it up on the meat side with the bones curving away from you.
- Slide a sharp knife down, between the bones cutting gently through the meat. You should be able to see the bones all the way down along the back side of the rack.

CHICKEN (Requires Slower Grilling):

- First, cut and remove the center bone from the chicken.
- Flatten the breast by pressing flat until the cartilage is broken.
- Rub olive oil over the chicken and sprinkle thyme, parsley, sage, rosemary, salt & pepper.
- Grill with skin side down for approximately 17 minutes at 350° F or until skin is crispy;
- Flip and grill for approximately 28 minutes or until internal chicken temperature is 160° F.

CHICKEN MARINADE:

- Combine ½ cup soy sauce
- ¼ cup vegetable oil
- ¼ cup red wine vinegar
- 1 tsp oregano
- ½ tsp sweet basil
- ½ tsp garlic powder w/ parsley
- ¼ tsp pepper.
- Pour over chicken pieces in glass dish.
- Cover and refrigerate overnight. Use marinade to baste chicken while cooking

CEDAR PLANK SALMON:

- Soak planks for 3-4 hrs before cook. Rub salmon with olive oil, dizzy pig raging rub & lemon.
- Prepare AKORN™ at 425°
- Place plank on grill. Once it starts ‘crackling,’ Place salmon on grill (around 5 minutes)
- For thick salmon filets, estimate about 10 - 13 minutes for the fish to start ‘flaking’.

SWEET CORN IN HUSKS:

- Trim excess silk from end and soak in cold salted water 1 hour before grilling.
- Grill 25 minutes – turning several times.

QUAIL OR DOVES:

- Cover birds in Italian dressing and marinate overnight.
- Pour remaining dressing and cover with Texas Pete® Hot Sauce for 6 hours.
- Wrap birds in thick bacon secured by a toothpick.
- Place on grill. Keep turning until bacon is black.
- Grill for 20 minutes. Sear with lid open at HIGH temperature (500-700° F) for 1 minute on each side before closing lid and lowering temperature.

KABOBS:

- Alternating on skewers any combination of meat, onions, tomatoes, green peppers, mushrooms, zucchini, circular slice of corn-on-the-cob, or pineapple. Meat could consist of chunks of shrimp, scallops, lobster, chicken, sausage, pork, beef, etc.
- Marinate the meat in refrigerator for several hours.
- Grill each side approximately 7 minutes turning occasionally while basting with marinade. Leave a small amount of room between pieces in order to cook faster.
- Grill with lid up and the fire grate in the lowest position. See marinade recipe on last page.

Kabob Marinade:

- 1 cup soy sauce
- ½ cup brown sugar
- ½ cup vinegar
- ½ cup pineapple juice
- 2 tsp salt
- ½ tsp garlic powder
- Mix all ingredients in a saucepan and bring to boil.
- Allow marinade to cool before marinating your meat in it.
- Marinate beef in mixture a minimum of 4 hours.

SHRIMP (Peeled) & CRAYFISH:

- Place on skewers.
- Coat with melted butter and garlic salt.
- Grill 4 minutes on each side or until pink. Cocktail sauce optional.

BAKED POTATOES:

- Rub with butter and wrap in foil and cook on grill with lid down for 50 minutes.
- Turn after 25 minutes (no need to turn if smoked).
- Squeeze to check for doneness.

TIPS FOR AKORN SMOKING

(Indirect Heat)

- Smoke long and slow in the 200° to 350° F range
- Adjust the dampers for desired temperature. Remember, more air equals higher temperature.
- Lump charcoal is preferred over briquettes.
- Put several layers of charcoal in firebox with soaked hickory chips (soak 40 min to 3 hrs) mixed in or on top of coals for a wood smoke flavor to the meat.
- Use less lump charcoal than you would briquettes.
- For slow cooking, (250 to 350°) build small fire and light with fire starter at top of the charcoal pile
- Light charcoal pile at bottom for high temp fires. Easy to heat up, harder to bring down.
- Bring meat to room temp before cooking and use meat thermometer to know when done.

Indirect Heat

SMOKING TIMES

Food	Weight	Maker Pan Smokin'		Temperature on Meat Thermometer
Beef Roasts, Beef Bristet	3 – 4 lbs.	1 – 1½ hours	4 – 5 hours	140° rare
Lamb Roasts, Venison	3 – 7 lbs.	1¼ – 2½ hours	5 – 6 hours	160° medium
Large cuts of Game	7 – 9 lbs.	2½ – 3½ hours	7 – 10 hours	160° well done
Pork Roasts	3 – 4 lbs.	1¼ – 2½ hours	5 – 6 hours	170°
	6 – 8 lbs.	2½ – 3 hours	7 – 8 hours	170°
Pork/ Beef Ribs	Full grill	1½ – 2 hours	4 – 5 hours	Meat pulls from bone
Pork Chops	Full grill	½ – 1½ hour	4 – 5 hours	Meat pulls from bone
Sausage Links	Full grill	2 – 2½ hours	4 – 5 hours	160° for fresh sausage
Ham, Fresh	10 lbs.	3 – 4 hours	7 – 8 hours	160°
Ham, Cooked	All sizes	1½ – 2 hours	3 – 4 hours	160°
Chicken (Cut up or split)	1-4 fryers, cut up or split	1 – 1½ hours	4 – 5 hours	160°F leg moves easily in joint
Chicken (Whole)	1-4 fryers	1¼ – 1½ hour	5 – 6 hours	160°F leg moves easily in joint
Turkey (Unstuffed)	6 – 12 lbs.	1¼ – 2½ hours	7 – 8 hours	160°F leg moves easily in joint
Fish, small whole	Full grill	½ – ¾ hours	2 – 3 hours	Flakes with fork
Fish, fillets, steak	Full grill	¼ – ½ hours	1 – 3 hours	Flakes with fork
Duck	3 – 5 lbs.	1 – 1½ hours	5 – 6 hours	160°F leg moves easily in joint
Small game birds	Full grill	¼ – 1 hour	4 – 5 hours	160°F leg moves easily in joint

PORK BUTT or VENISON (bone in – 6/9 lbs):

- 1 cup commercial dry BBQ rub and/or deeply inject seasoning of your choice into meat
- Work the rub into the butt until it is moist.
- Wrap in saran and place in refrigerator for 3 to 5 hours.
- Cook the butt for 18 hours at 235° F or when internal meat temperature reaches 200°F.
- Remove & double wrap in foil and let sit 30 minutes before pulling apart.

RACK OF BABY BACK RIBS:

- Remove membrane by placing the tip of a meat thermometer between the membrane and a bone near the end of the rack of ribs.
- Work membrane loose and peel it off.
- Wash the ribs under cool water.
- Apply dry rub to all sides and let stand at room temperature for 30 minutes.
- Smoke for 1½ hr at 325° F.
- Remove meat from grill and brush all sides with honey BBQ sauce.
- Put meat into a rib rack in a foil pan with 1” apple juice.
- Cover with foil & cook 1 hr at 325°F or until pork’s internal meat temp is: Med 160°F; Well Done 170°F; Insert tooth picks to test tenderness.
- Remove and serve.

Char-Griller Rib Sauce:

- 1 cup of your favorite dry BBQ rub
- 1 cup of honey
- 1 ½ cup apple juice
- 2 cups honey BBQ sauce.
- Mix thoroughly and brush on ribs

RIB ROAST:

Preparation:

- Use a 4 lb standing rib roast
- Rub seasoning over the entire roast
  - 1 TBS paprika
  - 3 TBS crushed garlic
  - 2 TBS Worcestershire
  - 2 tsp Adolph’s tenderizer.
- Apply salt & pepper to suit your tastes.
- Set roast aside in V rack.
- In casserole dish, mix
  - 1 cup rock salt
  - 1 TBS flour
  - one egg wht
  - 1 TBS water to tacky paste.
- Place roast back in casserole dish and press the salt/flour mixture on to the roast surface.
- Continue to do so until the entire roast surface is covered with the salt/flour mix.

Note: Use cheese cloth to hold the salt to the surface of the roast if desired.

Cooking Directions:

- Over a drip pan with no water, place roast in to roasting rack
- Cook roast 15 minutes per pound at 500 to 525°F for medium rare
- Put meat thermometer in roast last 30 mins cooking: 145°rare; 160°med; 175°well done
- When cooking is done, remove roast and allow it to sit uncovered for 10 minutes
- Break shell of salt away from roast & remove. Salt will be brittle and may have to scraped from meat surface.
- Let roast sit another 5 mins, slice and serve.

Au Jus Sauce:

- In 10” skillet or shallow pan place 4 to 6 small chunks of roast along with 3 to 4 TBS water.
- Stir & heat over med heat until water becomes dark & viscous from the chunks of roast.
- Add 1 to 2 cups of water and increase heat under pan.
- When water just starts to boil, add 2 teaspoons of beef bullion crystals.
- Stir until crystals are completely dissolved.
- Remove from heat, strain to remove any chunks of roast used for flavoring and serve.

PRIME RIBS: (Bone In)

Smaller end often juicier (2 bones = 4 people)

- Season prime rib with garlic, pepper, BBQ rub, and wrap in plastic & let sit for at least 1 hr.
- Place drip pan below to catch drippings
- Sear the outside for a crust or others prefer to cook at 350° for 3 hours for 8 lb prime rib
- Remove before the prime rib is cooked, tent in foil and let sit for 10 minutes.

TURKEY or WHOLE CHICKEN:

Use up to a 15 lb Turkey or 8 lb Chicken.

- Place Bird vertically (up right) on cone wire rack in a drip pan. You can also lay the bird horizontally in “U” Meat Rack.

  NOTE: Using the optional Smokin’ Stone AKORN accessory is ideal for this method. Simply remove the cooking grate and place the Smokin’ Stone directly above the fire grate. This provides indirect heat, keeps the meat juicy, and offers more cooking space for large cuts of meat.
- Apply commercial dry rub, salt & pepper on entire bird and apply rub under the breast skin at neck and some inside the cavity.
- Fill drip pan with 2 cups chicken broth, wine, water, celery & onion.
- Cook approx 12 minutes per lb at 325°F until internal meat temp (in breast) is 160°F.
- Use drippings in the Drip Pan to make gravy.

SMOKED TURKEY:

- Empty cavity rinse and pat dry with paper towel.
- Tuck wing tips under the back and tie legs together.

- Place in center of cooking grid directly above foil drip pan of water.
- Smoke for 12 minutes per pound. Allow several extra minutes per pound if stuffed to allow for expansion.
- Use a meat thermometer for best results (190F internal).

SMOKED BAKED HAM:

You can smoke fully cooked canned ham or smoked and cured whole ham or shank or butt portion.

Glaze

- 1 cup of light brown sugar, firmly packed
- 1/2 cup orange juice
- 1/2 cup honey

- Combine sugar, juice and honey. Let glaze sit for at least 4 hours.
- Place fire grate in the lowest position and a drip pan under the meat.
- Remove rind and score fat diagonally to give a diamond effect.
- Insert a whole clove into the center of every diamond.
- Place ham with fat side up in center of cooking grid directly above drip pan. Close lid.
- About 9 minutes per pound is suggested for fully cooked hams. Smoked or cured ham, which is not fully cooked, should be cooked to an internal temperature of 160°F.
- Baste with ham glaze 3 or 4 times during last 30 minutes of cooking time.
- Garnish with pineapple rings about 15 minutes before end of cooking time.

SMOKED HOT DOGS STUFFED:

- Slit hot dogs lengthwise, within 1/4 inch of each end.
- Stuff hot dogs with cheese and relish and wrap in bacon.
- Place on cooking grid over drip pan and smoke 15-20 minutes or until bacon is crisp.

SMOKED CHICKEN PARTS AND HALVES:

- Rinse pieces in cold water and pat dry with paper towels.
- Brush each piece with vegetable oil and season to taste with salt and pepper.
- Brown pieces directly above coals with lid open for several minutes.
- Then place pieces on cooking grate directly above drip pan.
- With the grate in the low position, cook with lid down for 55 to 60 minutes or until done. Do not use vegetable oil or salt and pepper if using marinade.

SMOKED VENISON:

Venison Marinade:

- 1 cup Balsamic or wine vinegar
- 1 cup olive oil
- 2 oz. Worcestershire
- 1/2 oz. Tabasco
- 2 tbsp. Season All
- 1-2 chopped jalapenos
- 3 oz. soy sauce

Bacon Marinade

- 2 oz. wine vinegar
- 2 oz. Worcestershire
- 4 dashes Tabasco

- Place leg of venison in a container or “hefty bag” and marinate for 2-4 days, turning daily. Marinate bacon overnight in its marinade.
- Remove roast from refrigerator at least an hour before cooking.
- Season generously with seasoned salt and coarse ground black pepper.
- Wrap 1 lb. Bacon over the top of the roast, and smoke 20/25 minutes per pound, or until tender. Do not overcook.

SMOKED SHRIMP & CRAYFISH:

- Mix in a foil pan 1/2 cup butter, two cloves of crushed garlic, Tabasco, sliced green pepper, 1 tablespoon each of minced onions, salt and juices from one lemon.
- Add shrimp and/ or crayfish and smoke 45 minutes.

SMOKED VEGETABLES:

- Turnips, potatoes, carrots, okra, mushrooms, peeled onions, zucchini, squash, etc.
- Put in pan and cover with water and cook for several hours while cooking the meat. Or place vegetables on grill and smoke for 50 minutes, either wrapped in foil or not.

SMOKED FISH:

- Marinate in brine (1/4 cup dissolved in 1 qt of water) or marinate fish in 1 cup white wine, 1 cup soy sauce mixed with 1 cup lemon juice.
- Marinate overnight in covered dish in refrigerator.
- Let air on rack 20 minutes before placing on Pam®-sprayed grill.
- Smoke 25 minutes.

SMOKED SPARE/BACK RIBS:

- Peel off tough layer of skin on back side.
- Rub all surfaces with seasoning.
- Place ribs in center of grid above drip pan and smoke approximately 1 1/2 hours or until meat pulls away from bone.
- Baste with barbecue sauce during last 30 minutes.

BAKING on the AKORN

Bake pizza, bread, cornbread, biscuits, cobblers, cookies and pies. We recommend purchasing the Smokin' Stone™ and/or Pizza / Baking Stone accessory for best results. The stone allows moisture to be drawn from dough and provides crispy and light crusts.

BAKED BREAKFAST PIZZA:

- Start by smoking center cut bacon on the AKORN™.
- Next scramble 4 or 5 eggs on the stove, or use Cast Iron skillet and make on the AKORN™.
- While the eggs are cooking, brown several cups of hash browns.
- Make or purchase 1 jar (approx 10 oz) white gravy.
- Use a precooked pizza crust and spread a layer of white gravy onto it.
- Next mixed hash browns, eggs and bacon into a bowl and place them onto the pizza crust
- Top with cheese and more gravy.
- Cook at 450° for approximately 13 mins

12 inch HOME MADE PIZZA:

Sauce: 1 Tbsp olive oil, 1/2 onion diced small, 1 clove garlic minced, 1 x 15-oz can whole tomatoes, 1 sprig Fresh Oregano, 1/2 tsp sugar, 1/2 tsp kosher salt, 1/8 tsp ground pepper

Crust: 1½ cups warm water, 2 TBS olive oil, 2 tsp kosher salt, 3 x 3/4 cups bread flour, ½ corn meal, 2 tsp sugar, 2 tsp rapid rise yeast

Preparation

Sauce:

- Heat the oil in a 1-1/2 qt sauce pan. Cook the onion and garlic until softened and translucent, about 3 minutes. Stir as necessary.
- Add tomatoes, crush lightly with hands as added. Add juice too. Strip leaves from oregano stem & chop
- Add oregano & sugar. Simmer, stir occasionally for about 20-30 mins, until thickened. Add salt / pepper.

Crust

- Purchase ready-made crust or dough, or…..
- Place ingredients in the order listed into bread machine. Run machine on pizza cycle. To use immediately, move to Pizza Screen (or place in oiled bowl, cover & place in refrigerator until ready to use).

Pizza

- Add the sauce and other ingredients (if you like) to the crust.
- The pizza can be cooked two different ways.
- 1. Preheat grill to 650°. Wet pizza stone (to cool), place pizza on stone and cook 6 mins.
- 2. If grill cannot achieve hot temp, then pre-heat grill to 350° and cook 15-20 mins (until golden brown)
- Let sit for 5 minutes and enjoy! Pizza screen will help take pizza on and off grill.

This Page Intentionally Left Blank

ACCESSORIES

Smokin' Stone
Circulates air around meat & protects meat from direct flame and heat. Enhances tastes and tenderness

AKORN Cover
Custom-fit, weather-resistant cover to protect your grill from the elements

Adjustable Fire Grate
For precise heat control
(Hot, Medium, and Low)

Charcoal Basket
Confines Coals to One Side for Smoking
Indirect Cooking

Pizza Stone
Circulates air around dough.
Use for baking, pizzas or other delicate food items

Apron
Machine Washable
Two Front Pockets
Adjustable Straps

Quick Release
Chimney Starter
E-Z starter with patented Trigger release
ABS handle with heat shield
Zinc coated galvanized steel
Makes starting charcoal grill fast and easy

This Page Intentionally Left Blank

For pricing or to order accessories visit:

www.CharGriller.com

OR

CALL: 912-638-4724

P.O. Box 30864
Sea Island, GA 31561
912-638-4724
www.CharGriller.com
Service@CharGriller.com