OWNER'S MANUAL

Patio Pro™

Model #1616

Keep your receipt with this manual for Warranty.

OM_1616_ED_C.2

This Page Intentionally Left Blank

TABLE OF CONTENTS

Safety Warnings & Warranty.....A-1
Assembly Instructions B-1
Product Usage C-1
Recipes D-1
Accessories E-1

IMPORTANT SAFETY WARNINGS

READ ALL SAFETY WARNINGS AND INSTRUCTIONS CAREFULLY BEFORE ASSEMBLING AND OPERATING YOUR GRILL

Read the following instructions carefully and be sure your appliance is properly assembled, installed, and maintained. Failure to follow these instructions may result in serious bodily injury and/or property damage.

- Grill is for use outdoors and in well-ventilated areas, only.
- Use caution when assembling and operating your grill to avoid scrapes or cuts from sharp edges.
- Do not use gasoline, kerosene, or alcohol to light charcoal. Use of any of these or similar products could cause an explosion possibly leading to severe bodily injury.
- Do not leave a lit grill unattended. Keep children and pets away from grill at all times.
- Use caution when moving grill to prevent strains.
- Keep grill at least 15 feet from any combustible material (decks, buildings, fences, trees, bushes, etc).
- When adding charcoal and/or wood, use extreme caution.
- Never move grill when it is in use or when it contains hot coals or ashes.
- Do not place grill near flammable liquids, gases, or where flammable vapors may be present.
- Use caution since flames can flare-up when fresh air suddenly comes in contact with fire.
- When opening the lid, keep hands, face, and body safe from hot steam and flame flare-ups.
- WARNING: To avoid injuries gloves or other protective articles should be used when touching the ash pan hangers.
- Do not exceed a temperature of 400°F.
- Do not allow charcoal and/ or wood to rest on the walls of grill. Doing so will greatly reduce the life of the grill.
- Always wear oven mitts to protect hands from burns. Avoid touching hot surfaces.
- CAUTION: Exposed metal dampers on air vents and and/or metal handles are hot during usage. Again, always wear oven mitts when adjusting air flow to protect hands from burns.

WARNING: FUELS USED IN WOOD OR CHARCOAL BURNING APPLIANCES, AND THE PRODUCTS OF COMBUSTION OF SUCH FUELS, CAN EXPOSE YOU TO CHEMICALS INCLUDING CARBON BLACK, WHICH IS KNOWN TO THE STATE OF CALIFORNIA TO CAUSE CANCER, AND CARBON MONOXIDE, WHICH IS KNOWN TO THE STATE OF CALIFORNIA TO CAUSE BIRTH DEFECTS OR OTHER REPRODUCTIVE HARM. *For more information go to: www.P65Warnings.ca.gov.*

ADVERTENCIA: LOS COMBUSTIBLES USADOS EN EQUIPOS PARA QUEMAR MADERA O CARBÓN, ASÍ COMO LOS PRODUCTOS DE TAL COMBUSTIÓN, PUEDEN EXPONERTE A SUSTANCIAS QUÍMICAS, ENTRE ELLAS EL NEGRO DE HUMO Y EL MONÓXIDO DE CARBONO, QUE EL ESTADO DE CALIFORNIA RECONOCE COMO CAUSA, RESPECTIVAMENTE, DE CÁNCER Y DE MALFORMACIONES CONGÉNITAS Y OTROS DAÑOS AL SISTEMA REPRODUCTOR. *Para más información, visite www.P65Warnings.ca.gov*

IMPORTANT SAFETY WARNINGS
(Continued)

- When opening lid, make sure it is pushed all the way back so it rests against the lid support brackets. Use extreme caution as hood could fall back to a closed position and cause bodily injury.
- Close lid and all dampers to help suffocate flame.
- Always hold an open lid from the handle to prevent it from closing unexpectedly.
- Never leave coals and ashes unattended. Before grill can be left unattended, coals and ashes must be removed. Use caution to protect yourself and property.
- Carefully place remaining coals and ashes in a noncombustible metal container and saturate completely with water. Allow coals and water to remain in metal container 24 hours prior to disposing.
- To protect against bacteria that could cause illness, keep all meats refrigerated and thaw in refrigerator or microwave. Keep raw meats separate from other foods, and wash everything that comes in contact with raw meat.
- Cook meat thoroughly, and refrigerate leftovers immediately.
- Use a calibrated food thermometer and the USDA guidelines to ensure that meat, poultry, seafood, and other cooked foods reach a safe minimum internal temperature.
- Always have a fire extinguisher near at all times. Maintain and check your fire extinguisher regularly.

DO NOT EXCEED A TOTAL OF 2 LBS / 0.9 KGS OF CHARCOAL FOR MAIN FIREBOX

THESE WARNINGS ALSO APPLY TO THE SIDE FIRE BOX.

REGISTER YOUR GRILL:

To take full advantage of the Char-Griller warranty be sure to register your grill by visiting **www.chargriller.com/pages/customer-support**.

Registration provides important protections:

1. In the extremely unlikely event of a product recall Char-Griller can easily contact you and rectify the issue.
2. If a warrantied part is broken or missing we can send you the needed parts promptly.

NOTE: You will need your model #, number, and a copy of the original sales receipt when registering.

STOP! CALL Char-Griller FIRST!

Do NOT Return Product to Store.

This grill has been made according to the highest of quality standards. If you have any questions that are not addressed in this manual or if you need parts please contact our Customer Service Department at www.chargriller.com/pages/customer-support and have your number handy.

Document Your Grill Model and Number HERE:
(Model and number are located on the back of the grill body or on the leg.)

_____

(MODEL #)

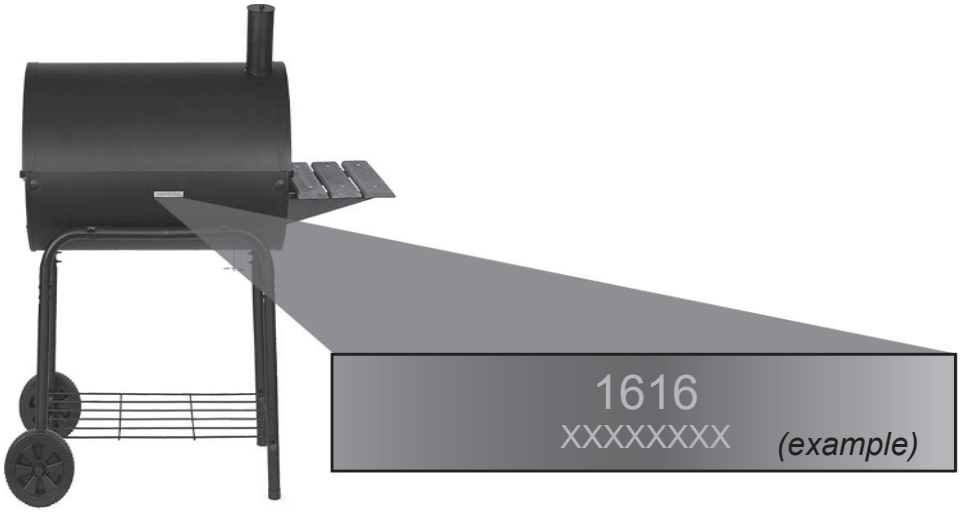

WARRANTY INFORMATION

A COPY OF THE DATED PROOF OF PURCHASE (RECEIPT) IS REQUIRED WHEN REGISTERING OR SUBMITTING A WARRANTY* CLAIM. PLEASE RETAIN A COPY OF THE RECEIPT FOR YOUR RECORDS.

Char-Griller will replace any defective part of its grillers/smokers, under warranty, as outlined below.

PLEASE READ THIS INFORMATION IN DETAIL AND IF YOU HAVE ANY QUESTIONS CONTACT CUSTOMER SERVICE AT www.chargriller.com/pages/customer-support.

Charcoal / Pellet / Kamado Grills	
Grill - Hood AND Bottom (excludes removable Ash Pan)	5 years from date of purchase for rust through / burn through
Ash Pan AND Defective Parts	1 year from date of purchase
Gas Grills	
Grill Hood (TOP half) AND Main Burner Tubes (exckudes Side Burner)	5 years from date of purchase for rust through / burn through
Grill Body (BOTTOM half) AND Side Burner AND Defective Parts	1 year from date of purchase
Dual Fuel Grills (Gas & Charcoal)	
Charcoal Grill - Hood AND Bottom AND Gas Grill Hood (TOP half) AND Main Burner Tubes (excludes Ash Pan and Side Burner)	5 years from date of purchase for rust through / burn through
Ash Pan AND Defective Parts AND Gas Grill Body (BOTTOM half) AND Side Burner	1 year from date of purchase
Parts, Accessories, and Grill Covers	1 year from date of purchase (seam tears only for covers)

SURFACE RUST IS NOT CONSIDERED A MANUFACTURING OR MATERIALS DEFECT

Char-Griller grills are made of steel and if exposed to the elements rust will occur naturally. Please refer to the section entitled, “Usage” to review how to care for your grill properly.

Surface issues such as scratches, dents, corrosion or discoloring by heat, abrasive and chemical clearers, surface rust or the discoloration of steel surfaces are NOT covered under these warranties.

Warranties are for the replacement of defective parts only. Char-Griller is not responsible for damage resulting from accident, alteration, misuse, abuse, hostile environments, improper installation, and installation not in accordance with local codes of service of unit.

Excluded Under ALL Warranties
Paint; Surface Rust; Heat Damage; Incorrect Parts ordered by customer, including shipping; Worn Parts; Missing or damaged parts not reported within two (2) months of purchase date; Defective parts not reported within one (1) year of purchase date; Fading grill cover.

*NOTE: For warranty claims, photos and prepaid return of the item in question may be required. Misuse, abuse or commercial use nullifies all warranties.

PARTS LIST

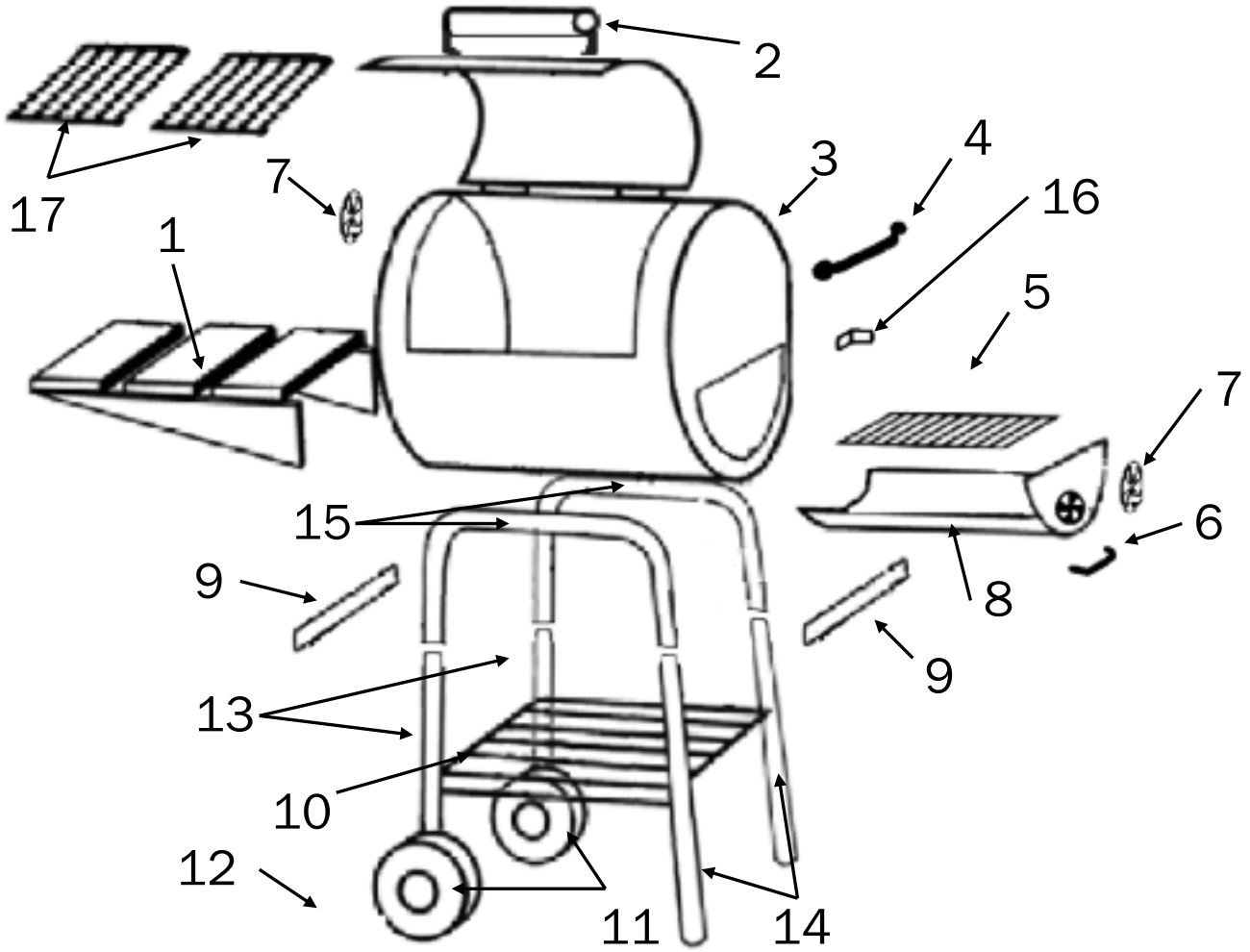

PARTS LIST

#	QTY	Part Name	Part #
1	1	SIDE SHELF	20-0114
2	1	HOOD HANDLE	55-0017
3	1	GRILL BODY	20-0102
4	1	WIRE HANDLE	55-0016
5	1	FIRE GRATE	20-0028
6	1	U HANDLE	55-0004
7	2	DAMPER CIRCLE	10-0036
8	1	ASH DRAWER	20-0100
9	2	LEG BRACE	10-0175
10	1	WIRE RACK	20-0103
11	2	WHEEL	55-0026
12	2	HUB CAP	55-0007
13	2	SHORT LEG	20-0106
14	2	LONG LEG	10-0174
15	2	LEG CROSS BAR	10-0173
16	1	DRAWER LATCH	10-0172
17	2	COOKING GRATE	10-0086

HARDWARE AND TOOLS NEEDED

Assembly: Requires 2 people. Get another person to help. Tools Needed: Pliers, Phillips Head Screwdriver and a 7/16” Nut Driver.

NOTE: Do Not tighten any bolts unless instructed to do so. Tightening too soon may prohibit parts from fitting together. All Hex Nuts should be on the inside of the grill unless stated otherwise. Unpack all contents in a well cleared and padded area.
Estimated Assembly Time: 45 minutes

STOP! Do Not Return to Store. If you are missing parts or need assistance please email us at www.chargriller.com/pages/customer-support.
Do not attempt to assemble or use if you are missing parts.

Hardware Pack:

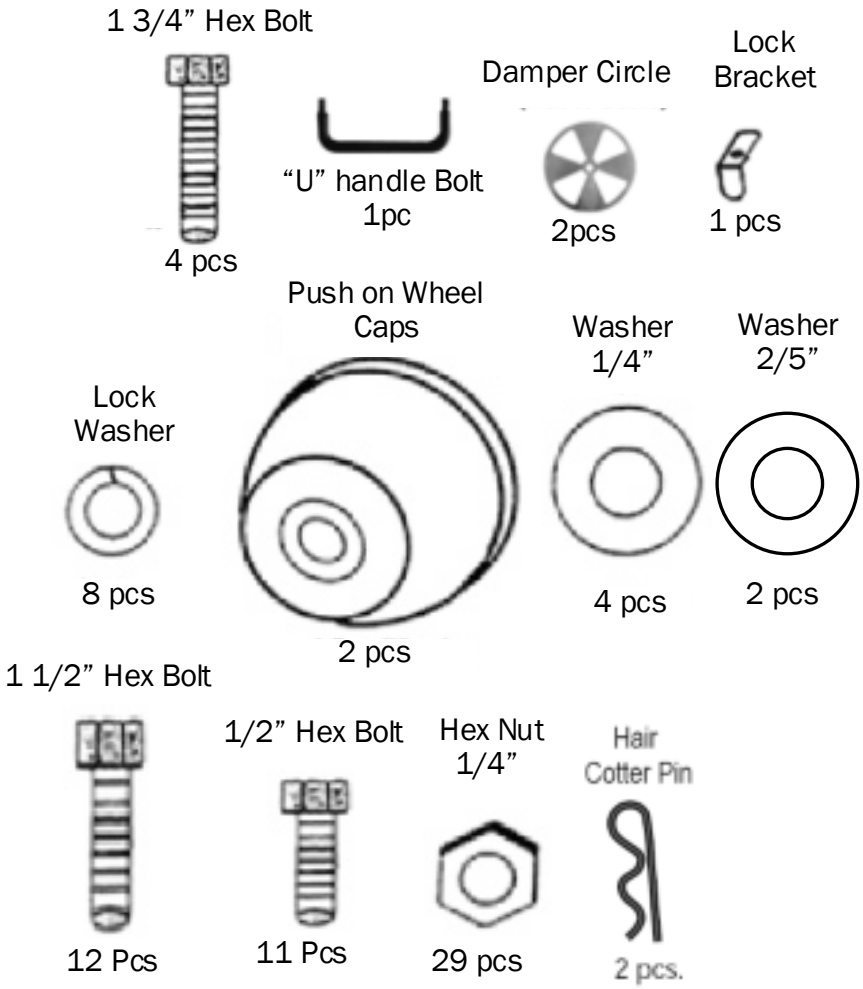

ASSEMBLY

Step 1

Insert SHORT LEGS and LONG LEGS into each end of LEG CROSS BARS, then attached with 1 3/4" hex bolt and nut, See below. (CAUTION: The holes direction on the LEG CROSS BARS are very critical for later assembly step so follow illustration below carefully.)

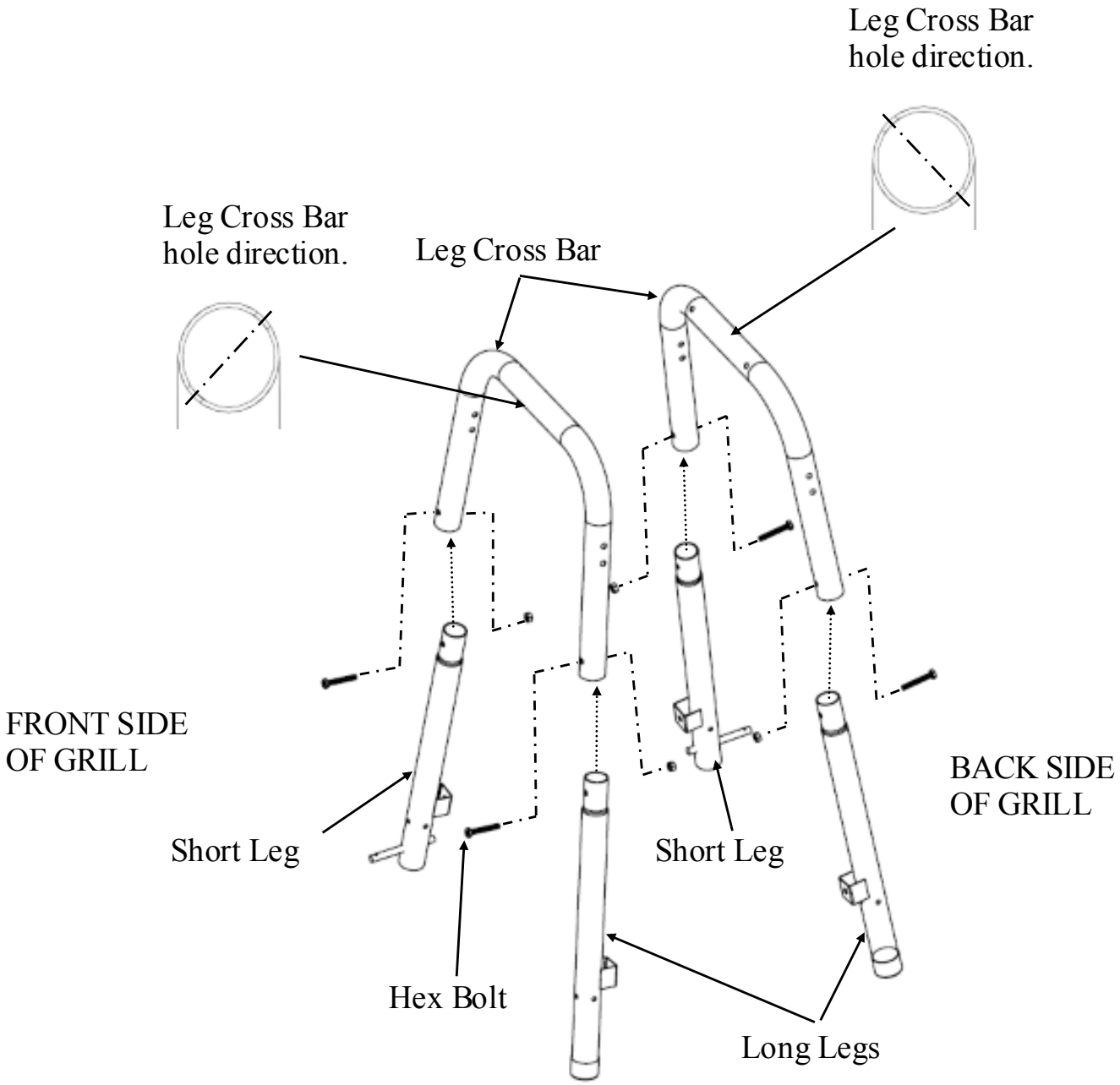

Step 2

Attach LEG BRACES to the outside of one of the LONG and SHORT LEG and LEG CROSS BAR assemblies from step 1. See below. Use two 1 1/2” hex bolts and nuts for each LEG BRACE but only finger tight.

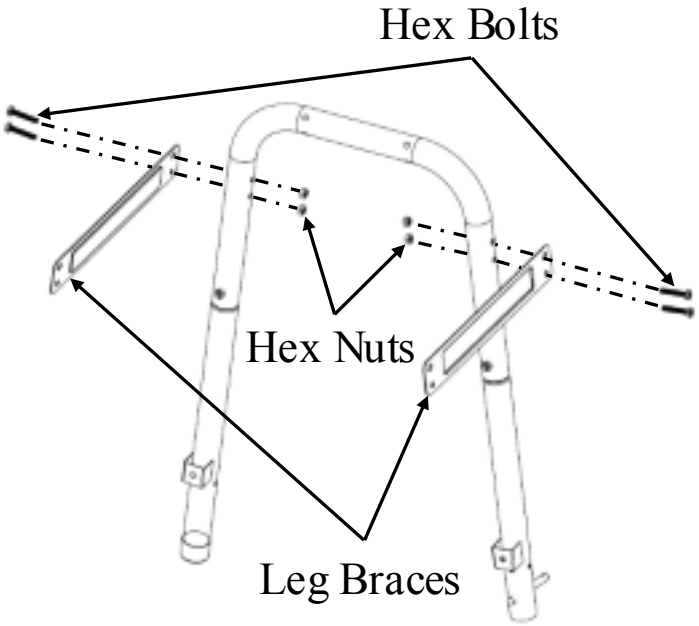

Step 3

Insert all four corners of the BOTTOM WIRE SHELF into the four holes located near the bottom inside of the four LEGS. See below Next, rotate the LEGS upward until vertical. Important: Make sure the two Long Legs are on the same end.

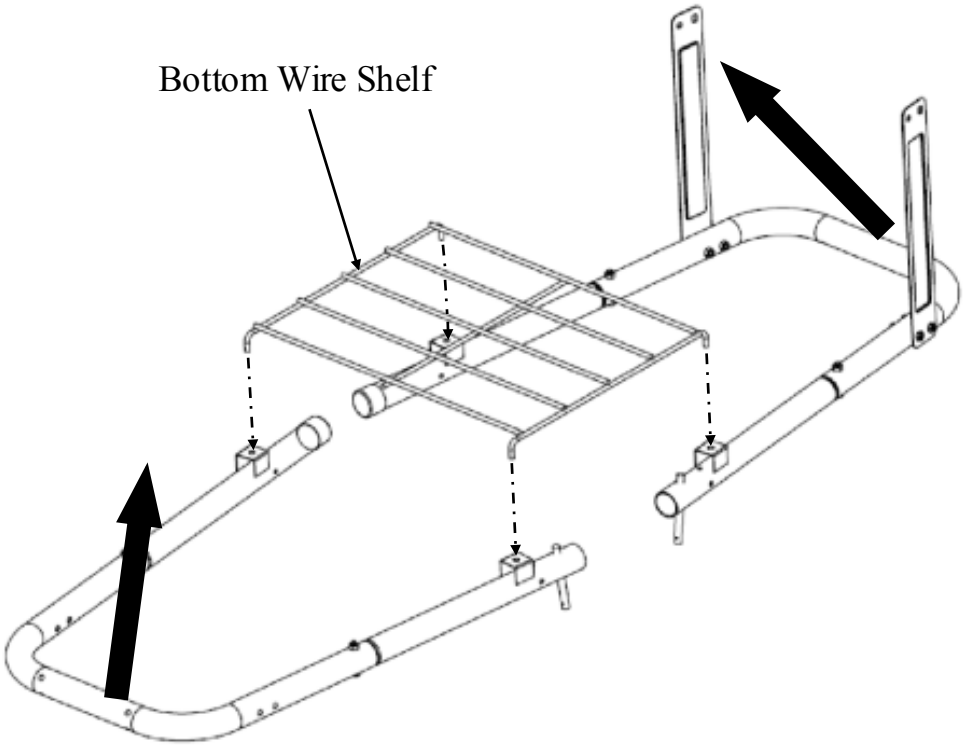

Step 4

Attach the other end of the LEG BRACES to the corresponding legs using 1 1/2” Hex Bolts and Nuts but ONLY finger tight, see below.

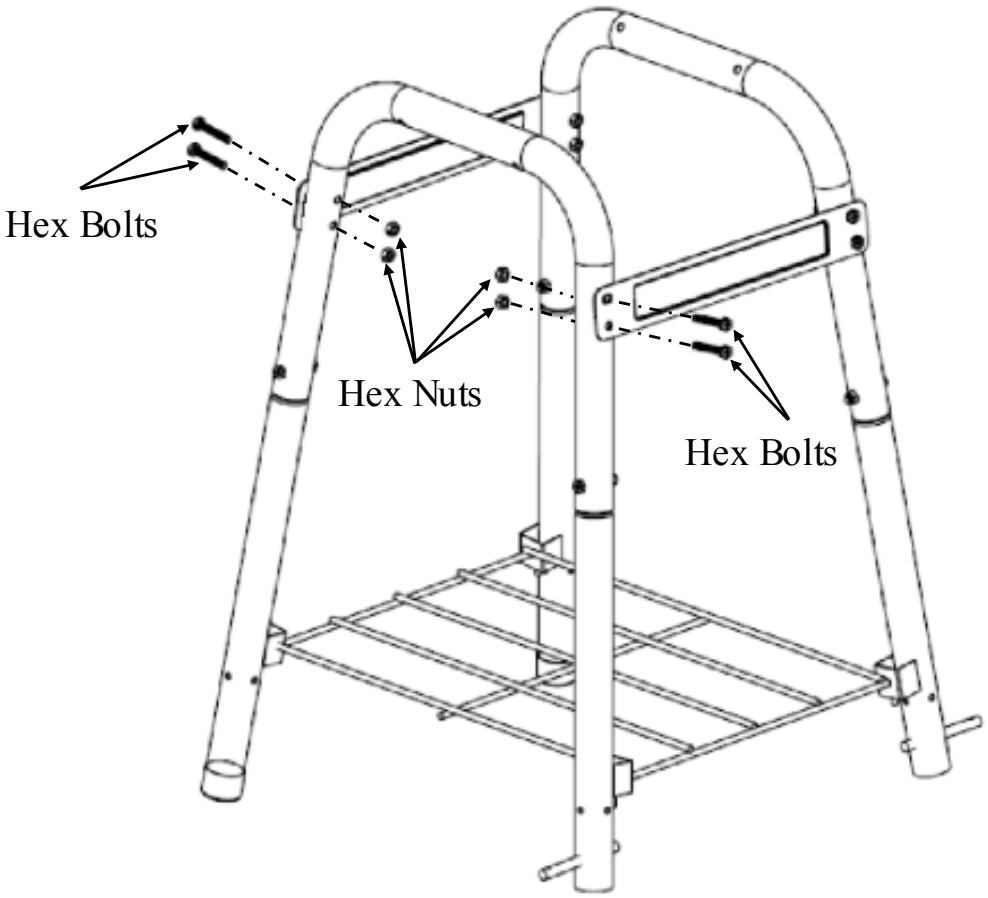

Step 5

Attach the WHEEL to the spindle coming out of the SHORT LEGS. Install one COTTER PIN and HUB CAP onto the spindle after the WHEEL. Repeat this on the opposite SHORT LEG.

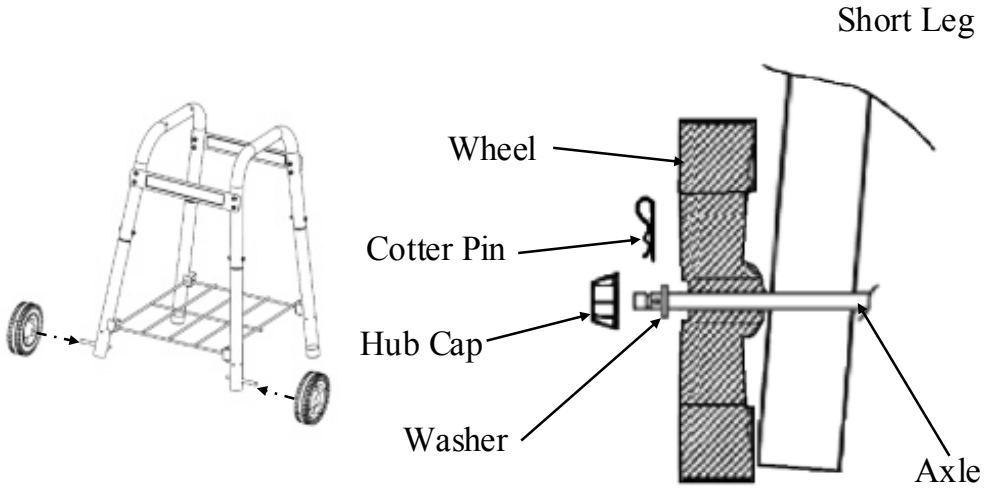

Step 6

Attach the GRILL BODY to the Cart/Leg Assembly (Make sure that the damper is on the same side as the wheels) with four 1 1/2” Hex Bolts.

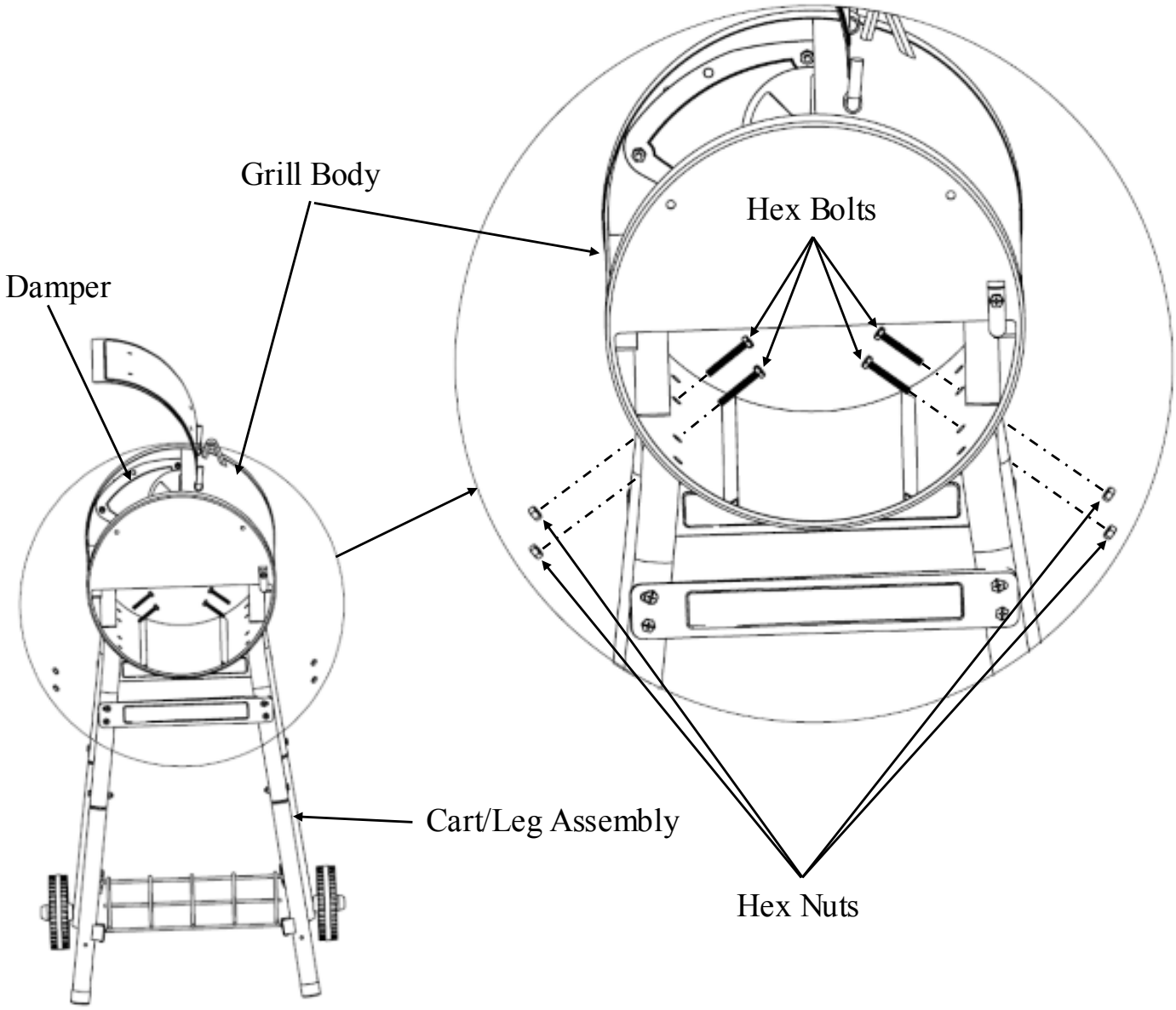

Step 7

Attach HOOD HANDLE with two 1/2” HEX BOLTS, two LOCK WASHERS, and two HEX NUTS.

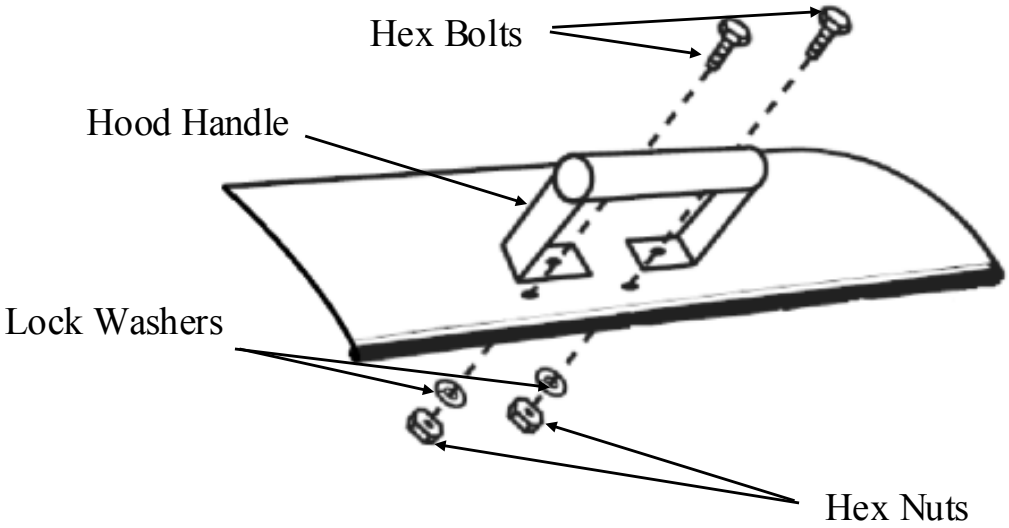

Step 8

Attach WIRE HANDLE to the right side of GRILL BODY with two 1/2” HEX BOLTS, two LOCK WASHERS, and two HEX NUTS.

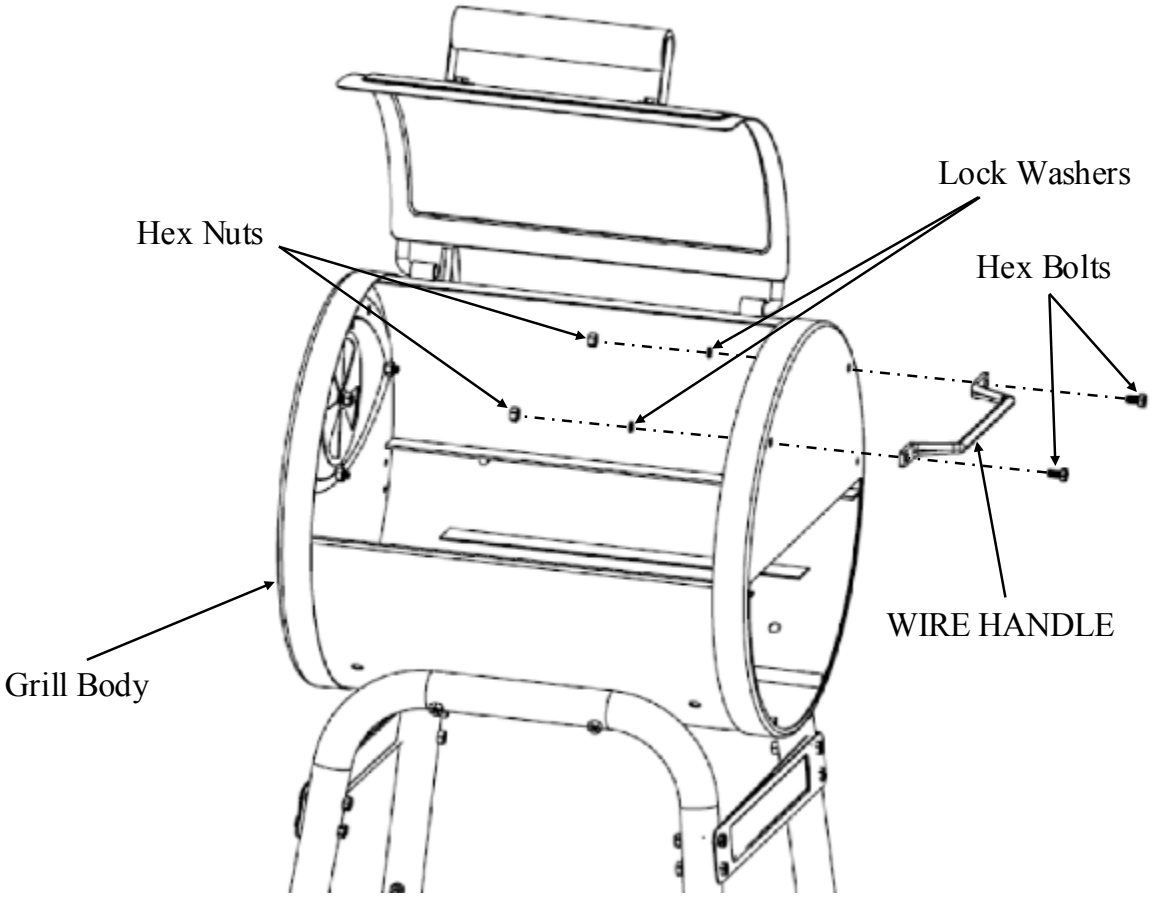

Step 9

Attach DRAWER LATCH to GRILL BODY right side with 1/2” HEX BOLT and HEX NUT.

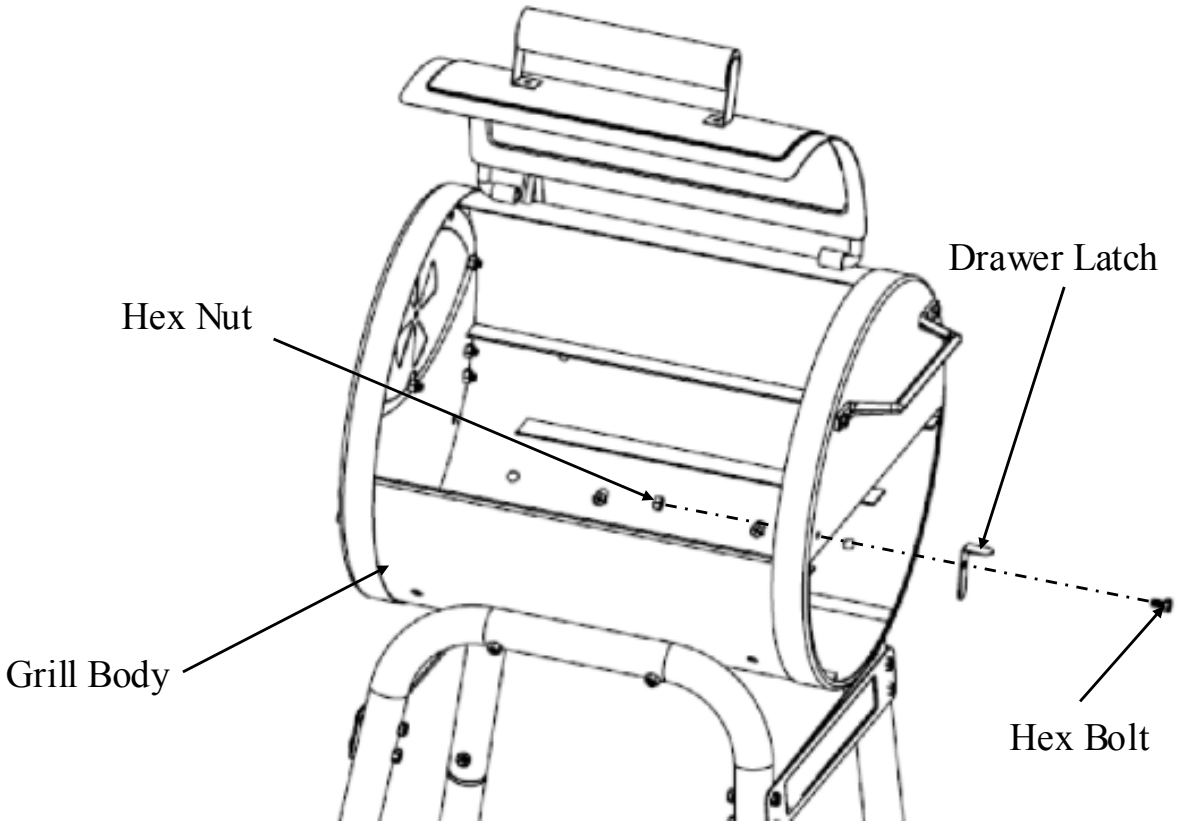

Step 10

Attach SIDE SHELF to left side of Grill BODY with four 1/2” HEX BOLTS and four HEX NUTS.

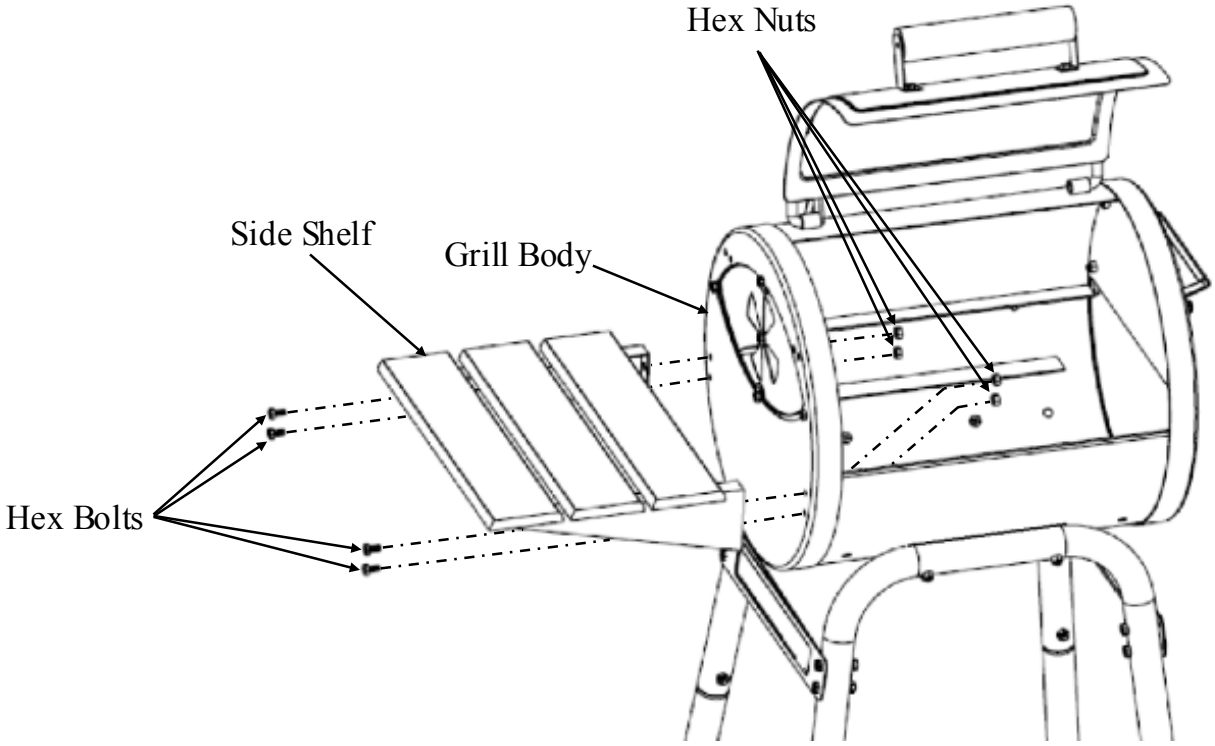

Step 11

Attach DAMPER CIRCLE to the ASH DRAWER with 1/2” HEX BOLT, FLAT WASHER, LOCK WASHER, and HEX NUT, see below.

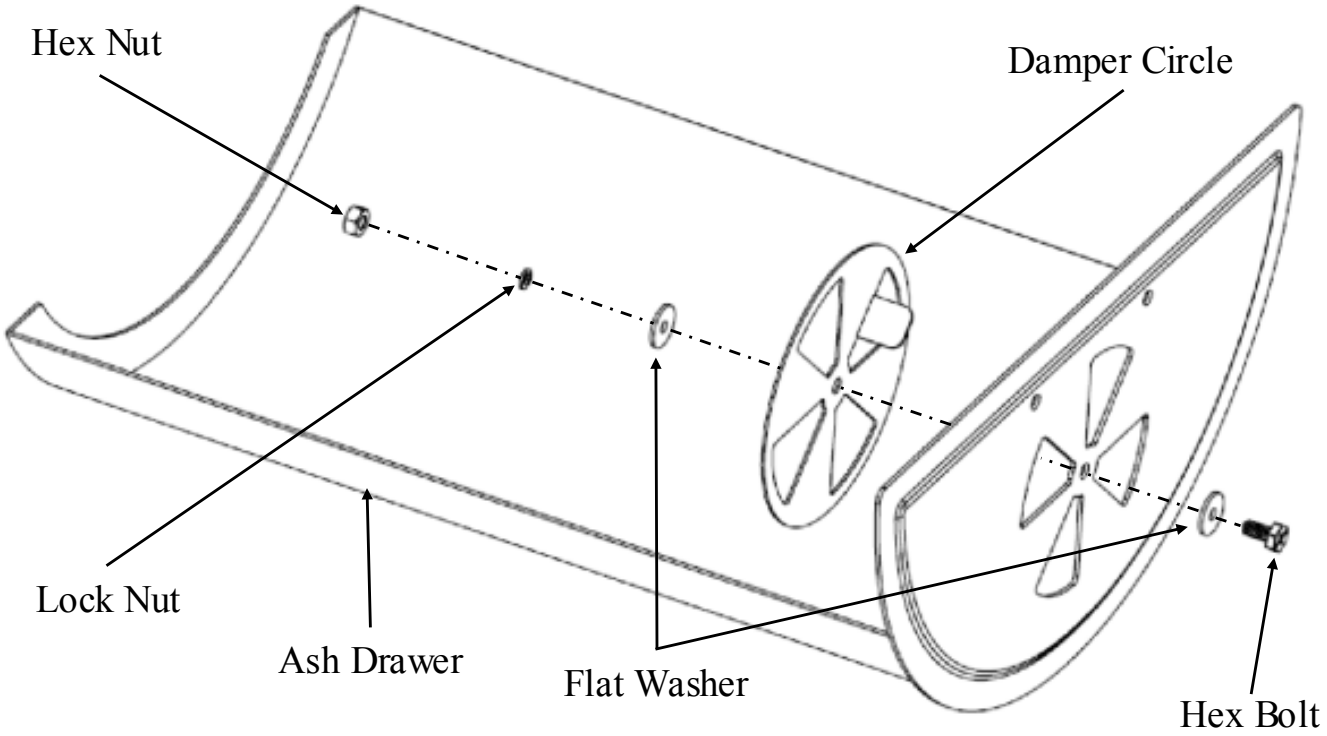

Step 12

Attach U HANDLE to ASH DRAWER with two LOCK WASHERS and two HEX NUTS.

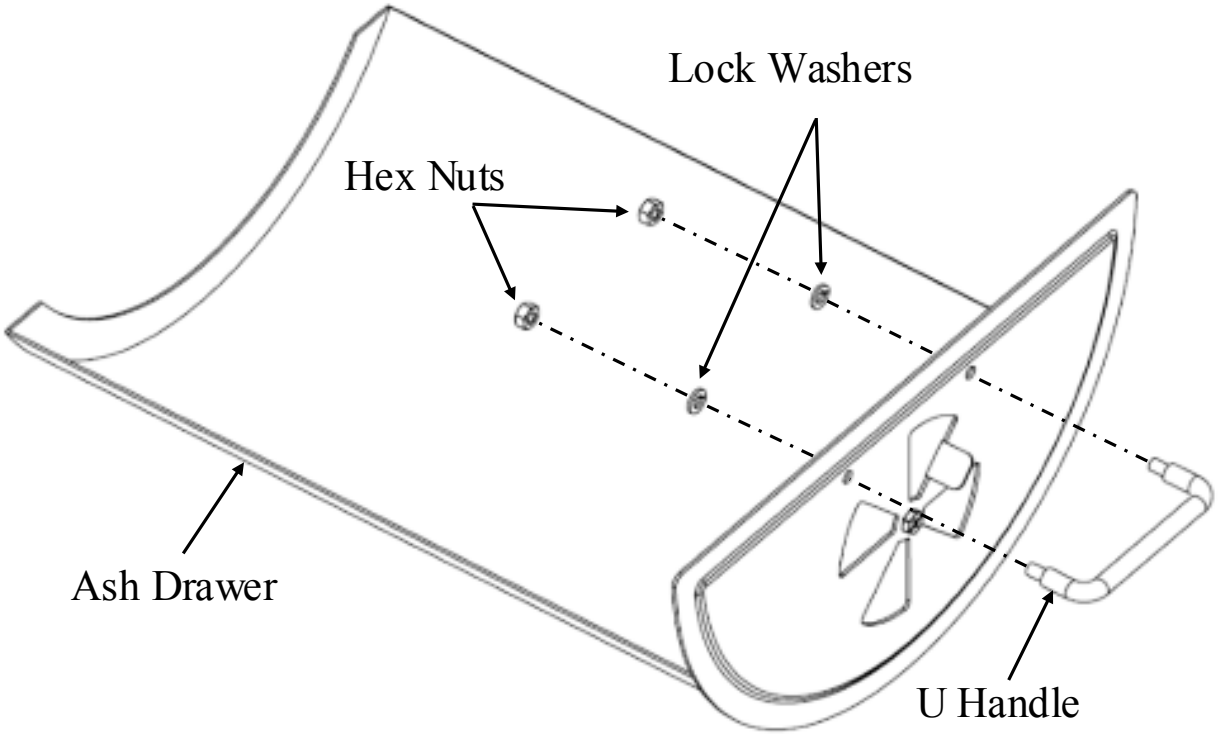

Step 13

Attach DAMPER CIRLE to GRILL BODY with HEX BOLT, FLAT WASHER, LOCK WASHER, and HEX NUT, see below.

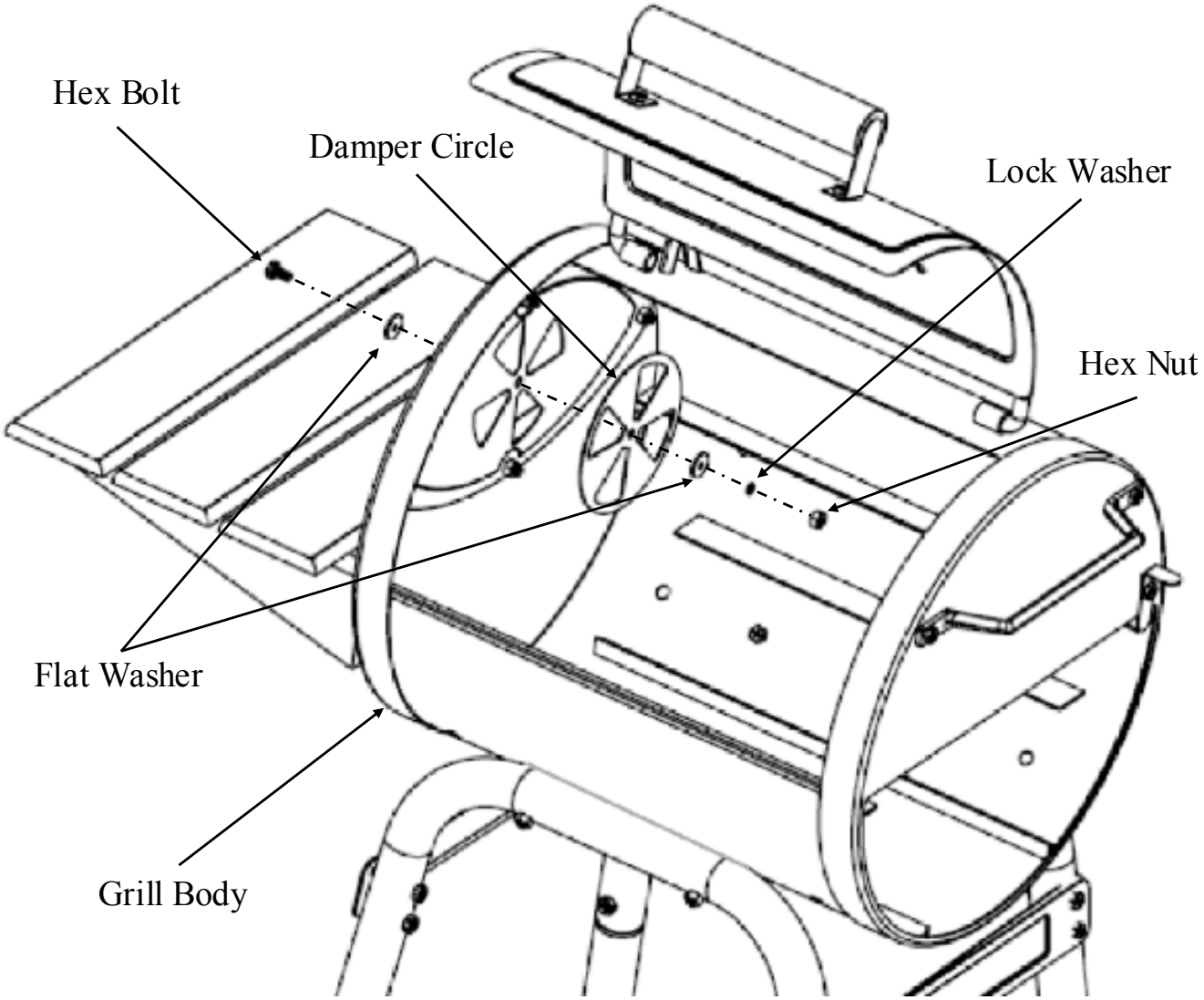

Step 14

Tighten ALL BOLTS and NUTS. Insert a 1/2” BOLT and tighten with a NUT for any open holes in Grill BODY after assembly.

Step 15

Place FIRE GRATE onto ASH DRAWER then slides it into GRILL BODY.

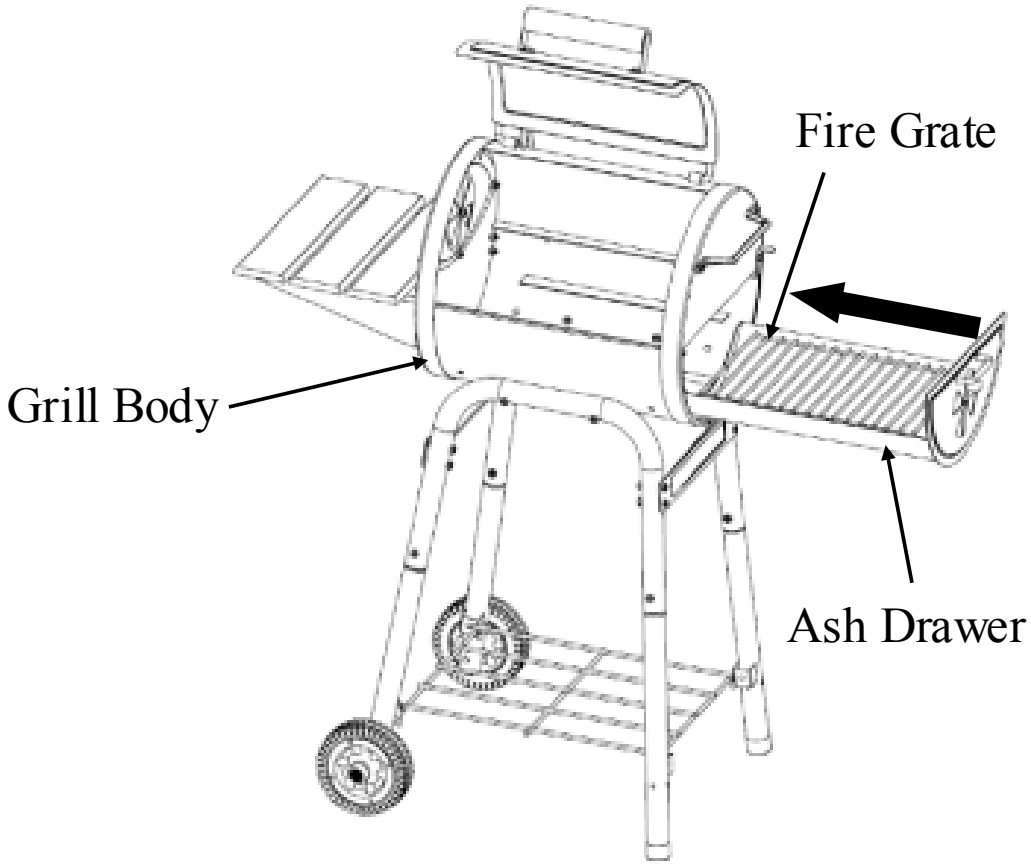

Step 16
Place COOKING GRATE into GRILL BODY.

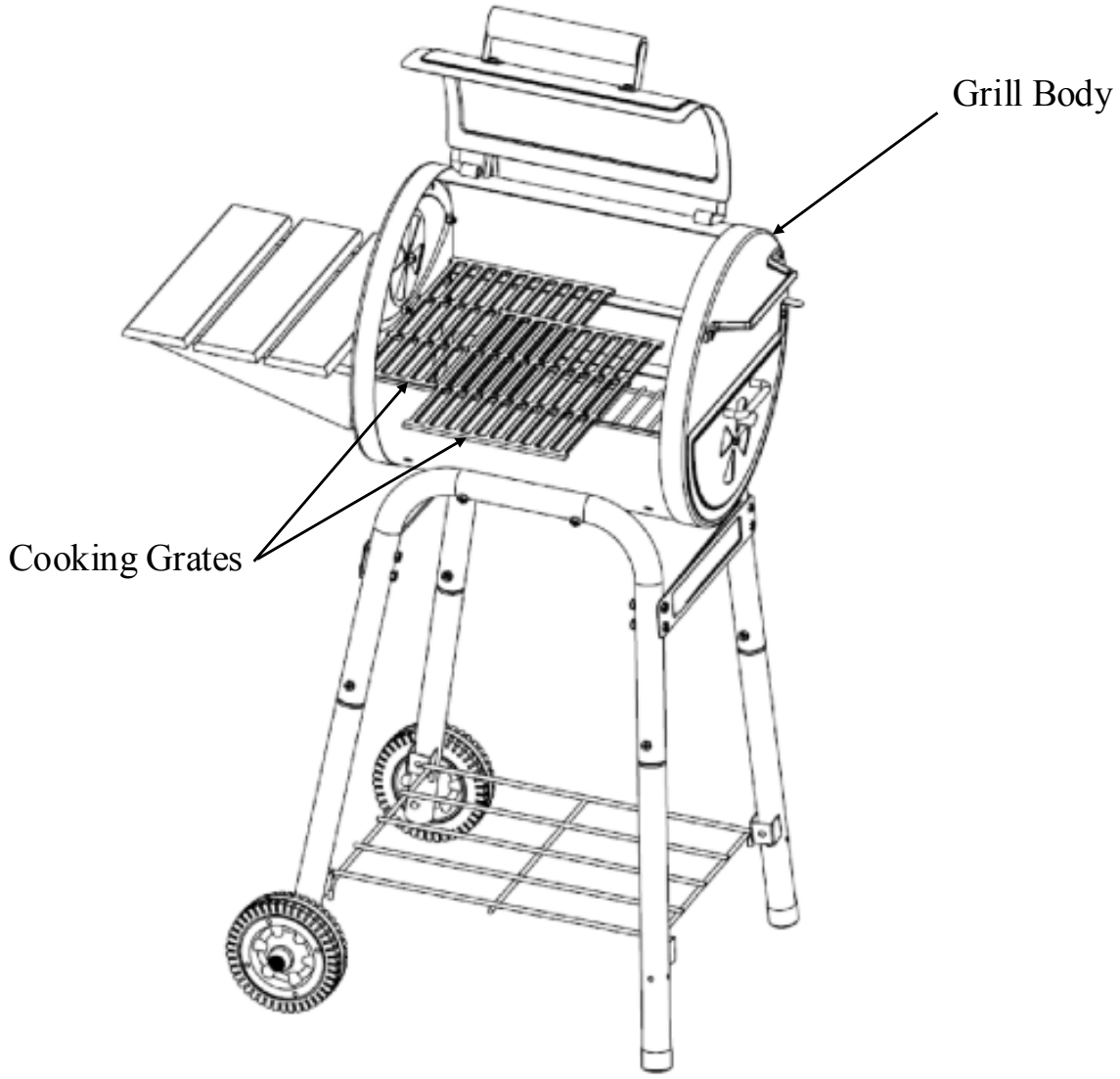

Fully Assembled

Hint: The paper label that is affixed to the hood is more easily removed when the hood is warm. Any remaining glue residue can be cleaned off with a spray lubricant like WD-40. Do NOT use any other type of solvent or cleaner because this will damage the finish/paint/coating on the grill.

OPERATING INSTRUCTIONS

Setting Up

Set grill up on solid, flat surface with adequate wind shelter. Do not move grill while hot, and do not leave unattended during operation.

This appliance is designed for use outdoors, away from any flammable materials. It is important that there are no overhead obstructions and that there is a minimum distance of 12 feet (366 cm) from the side or rear of the appliance. It is important that the ventilation openings of the appliance are not obstructed. The barbecue must be used on a level, stable surface. The appliance should be protected from direct drafts and positioned or protected against direct penetration by any trickling water (e.g. rain).

**** PLEASE NOTE: NO RETURNS ON USED GRILLS ****

Seasoning and Preparing the Grill

IMPORTANT! BEFORE YOU USE YOUR GRILL FOR THE FIRST TIME YOU MUST SEASON THE CAST IRON COOKING GRATE(S).

Cure grill prior to your initial use to protect the interior and exterior finish, cooking grates, and to prevent unnatural flavors to your first meals.

1. Lightly coat ALL INTERIOR SURFACES (including grills, grates, and inside of barrel.) with vegetable oil (spray vegetable oil is easiest but do not use near hot coals or fire).
2. Build a medium sized fire on the **fire grate**. Always put charcoal on top of the fire grate and not directly into the bottom of the grill.
3. After coals ash over, spread out coals, replace cooking grates, close lid and heat at approximately 250 F for two hours.
4. Remove grates from the grill with oven mitts, allow to cool, then re-coat grates and return to grill at approximately 200° F for two hours.
5. You can lightly coat the exterior of the grill body (while warm) with vegetable oil. This will extend the life of the finish, much like waxing a car. Your grill is now ready for use.

NOTE: Grill will drip oil during this process and for several uses afterwards. This is normal.

NEVER EXCEED 400°F BECAUSE THIS WILL DAMAGE THE FINISH AND CONTRIBUTE TO RUST. PAINT IS NOT WARRANTED AND WILL REQUIRE TOUCH-UP. THIS UNIT IS NOT WARRANTED AGAINST RUST.

Lighting Instructions

1. To start a charcoal fire, stack 15 or so briquettes in a pyramid and saturate with lighter fluid.
   NOTE: Do not use gasoline, kerosene or alcohol for lighting charcoal. Use of any of these or similar products could cause an explosion possibly leading to severe bodily injury.
2. Light coals in several places
3. After briquettes ash over or turn gray, spread them out and start cooking
4. If one end burns faster, use tongs to move coals from one end to the other for even heat.

Grill Operation & Tips

- Control heat with amount and type of fuel, Dual dampers, and adjustable fire grate. Adjust grate one end at a time. Wood burns hotter than coals. More airflow is more heat.
- To reduce flare-ups, cook with lid in the down position.
- Add water soaked hardwood chips for a smoked flavor.
- Ashes left in bottom too long hold moisture and will rust through any thickness of steel. This grill is made of steel and cast iron, which WILL RUST, ESPECIALLY IF NOT PROPERLY CARED FOR.
- Do not use self-starting charcoal as it will give unnatural flavor. Burn lighter fluid completely before closing lid.
- After each use, coat vegetable oil on the interior grates and bare metal while warm to reduce rust
- On the EXTERIOR, remove dust with wire brush and touch up with a high heat paint, available at most hardware/auto stores.
- You may place a coffee can on bottom shelf under the hole in the grill to catch drippings.
- Heat guage may obtain moisture, which will steam out during cooking. Gauge can be removed and calibrated in oven.
- You may fill unwanted holes with Nuts & Bolts (Not Provided).

NOTE: Smoke may escape from areas other than the smokestack. This should not affect cooking.

Finishing Up

When your are finished grilling you can shut down your grill by closing both dampers and allowing the fire to suffocate. Be patient. This make take an hour or more.

Emptying the Ashes & Ash Pan:

**** ONLY EMPTY ASHES WHILE GRILL IS NOT IS USE ****

After the fire is completely extinguished you should wait several hours before emptying the ashes to ensure they are not still hot and a burn hazard.

1. Knock any ashes that did not fall into the ash pan from the fire grate. (If there are pieces of partially burned charcoal on the fire grate you can save them for next time. They are still good).
2. Tap the sides of the fire bowl to knock loose any ash that is on the sides.
3. Unclip the ash pan from the bottom of the grill and slide out towards the front.
4. Give the ash pan a few firm taps to loosen any ash that may be stuck.
5. Place the ashes in a metal container and cover with water to ensure there are no lit coals then you can dispose of the ashes.

IMPORTANT: Charcoal is porous and holds moisture. DO NOT leave charcoal in your grill while you are not using it. Charcoal and ashes leftinside the ash pan may reduce the life of your grill.

This Page Intentionally Left Blank

GRILLING RECIPES

Know Your Cuts of Meat

BEEF CUTS

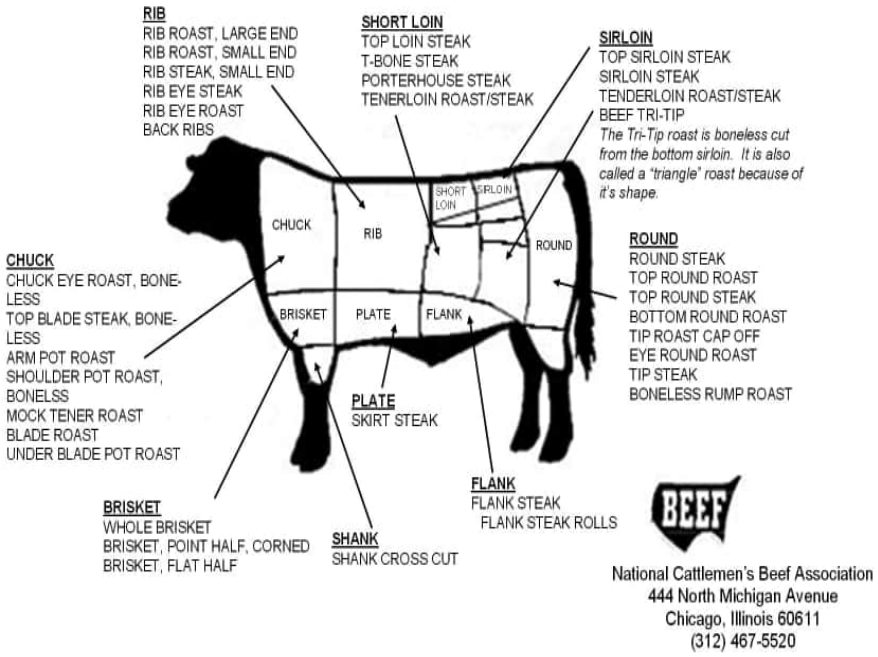

PORK CUTS

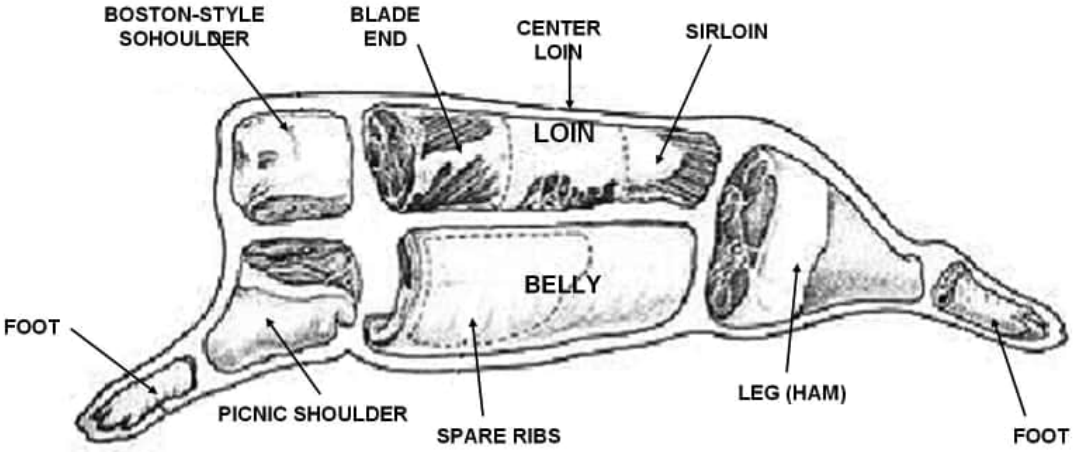

Direct Heat

- Direct Heat is a high heat method used to cook foods that take less than 25 minutes to cook. Typically, this means foods that are relatively small or thin such as steaks, chops, boneless chicken breasts, fish fillets, hamburgers, etc.
- Cooking with a MEAT THERMOMETER ensures food is fully cooked. Insert into the thickest part not touching bone, and allow five minutes to register.
- Internal temperatures for FOWL should be 170°F to 180°F.
- Internal temperature for meat should be 140°F for rare, 160°F medium, and 170°F for well done.

STEAK (& ALL MEATS):

- Cook food on the charcoal side of the unit, directly above coals/heat.
- To grill meats, raise fire grate to high position (hot) and sear for one minute on each side with the lid open to seal in flavor and juices. Then lower fire grate to medium position with lid closed and cook to desired doneness.
- Control heat with dual dampers and adjustable fire grate.

Tip: Place grilled meat back in the marinade for several minutes before serving – it will become tastier and juicier.
CAUTION: Boil extra marinade first to kill bacteria remaining from the raw meat.

MARINATED FLANK STEAK:

- Mix marinade ingredients in nonmetal dish.
- Let steak stand in marinade for no less than 4 hours in refrigerator.
- Brown each side for 5 minutes, but center should remain rare.
- Cut steak diagonally across the grain into thin slices before serving.
- Grill with fire grate in high (hot) position with lid open or closed.

Meat Marinade

1/2 cup vegetable or olive oil
1/3 cup soy sauce
1/4 cup red wine vinegar
2 tbsp lemon juice
1 tsp dry mustard
1 minced clove garlic
1 small minced onion
1/4 tsp pepper

QUAIL OR DOVES:

- Cover birds in Italian dressing (Good Seasons or Kraft Zesty) and marinate overnight.
- Pour remaining dressing and cover with Texas Pete Hot Sauce for 6 hours.
- Wrap birds in thick bacon secured by a toothpick.
- Place on grill. Keep turning until bacon is black.

- Grill for 20 minutes. Sear with lid open and fire grate in high (hot) position for 1 minute on each side before lowering grate and closing lid.
- To SMOKE, place birds in center of GRID with fire in both ends of FIRE BOX.

KABOBS:

- Alternating on skewers any combination of meat, onions, tomatoes, green peppers, mushrooms, zucchini, circular slice of corn-on-the-cob, or pineapple. Meat could consist of chunks of shrimp, scallops, lobster, chicken, sausage, pork, beef, etc.
- Marinate the meat in refrigerator for several hours.
- Grill each side approximately 7 minutes turning occasionally while basting with marinade. Leave a small amount of room between pieces in order to cook faster.
- Grill with lid up and the fire grate in the lowest position. See marinade recipe on last page.

Kabob Marinade:

1 cup soy sauce
½ cup brown sugar
½ cup vinegar
½ cup pineapple juice
2 tsp salt
½ tsp garlic powder

- Mix all ingredients in a saucepan and bring to boil.
- Allow marinade to cool before marinating your meat in it.
- Marinate beef in mixture a minimum of 4 hours.

HOT DOGS:

- Grill with lid up and fire grate in high (hot) position for approximately 6 minutes.
- Turn every few minutes.

HAMBURGERS:

See Meat Marinade on prior pages.
You may also marinate by allowing to stand in marinade for 1 or 2 hours at room temperature before cooking, or let stand in covered dish in refrigerator up to 24 hours.

- Bring to room temperature before cooking.
- Mix in chopped onions, green peppers, salt, sear 3/4 inch patties on each side with fire grate in high position for a few minutes.
- Lower fire grate to medium position and grill with lid down to avoid flare-ups.
- Cook each side 3 to 7 minutes according to desired doneness.
- Cook ground meat to 150 internally or until juice runs clear (free of blood) for prevention of E-coli.
- Burgers can be basted with marinade when turning and/or other ingredients can be mixed in with the ground beef such as chili sauce or powder.

SHRIMP (Peeled) & CRAYFISH:

- Place on skewers.
- Coat with melted butter and garlic salt.
- Grill 4 minutes on each side or until pink. Cocktail sauce optional.

BAKED POTATOES:

- Rub with butter and wrap in foil and cook on grill with lid down for 50 minutes.
- Turn after 25 minutes (no need to turn if smoked).
- Squeeze to check for doneness.

SWEET CORN IN HUSKS:

- Trim excess silk from end and soak in cold salted water 1 hour before grilling.
- Grill 25 minutes – turning several times.

SMOKING RECIPES

Indirect Heat

SMOKING TIMES

Food	Weight	Water Pan Smokin'	Side Fire Box	Temperature on Meat Thermometer
Beef Roasts, Beef Brisket	3 – 4 lbs.	1 – 1 1/2 hours	4 – 5 hours	140° rare
Lamb Roasts, Venison	5 – 7 lbs.	1 3/4 – 2 1/2 hours	5 – 6 hours	160° medium
Large cuts of Game	7 – 9 lbs.	2 1/2 – 3 1/2 hours	7 – 10 hours	170° well done
Pork Roasts	3 – 4 lbs.	1 3/4 – 2 1/2 hours	5 – 6 hours	170°
	5 – 8 lbs.	2 1/2 – 3 hours	7 – 8 hours	170°
Pork/ Beef Ribs	Full grill	1 1/2 – 2 hours	4 – 6 hours	Meat pulls from bone
Pork Chops	Full grill	3/4 – 1 1/4 hour	4 – 6 hours	Meat pulls from bone
Sausage Links	Full grill	2 – 2 3/4 hours	4 – 5 hours	170° for fresh sausage
Ham, Fresh	10 lbs.	3 – 4 hours	7 – 8 hours	170°
Ham, Cooked	All sizes	1 1/2 – 2 hours	3 – 4 hours	130°
Chicken (Cut up or split)	1-4 fryers, cut up or split	1 – 1 1/4 hours	4 – 5 hours	180° / leg moves easily in joint
Chicken (Whole)	1-4 fryers	1 1/4 – 1 1/2 hour	5 – 6 hours	180° / leg moves easily in joint
Turkey (Unstuffed)	8 – 12 lbs.	1 3/4 – 2 1/2 hours	7 – 8 hours	180° / leg moves easily in joint
Fish, small whole	Full grill	1/2 – 3/4 hours	2 – 3 hours	Flakes with fork
Fish, filets, steak	Full grill	1/4 – 1/2 hours	1 – 3 hours	Flakes with fork
Duck	3 – 5 lbs.	1 – 1 3/4 hours	5 – 6 hours	180° / leg moves easily in joint
Small game birds	Full grill	3/4 – 1 hour	4 – 5 hours	180° / leg moves easily in joint

Pan not included. Disposable bread pan is recommended. SMOKE BY COOKING SLOWLY (See chart above).

1. Place water/drip pan on left side of fire grate.
2. Place hot coals on right side (damper end) of fire grate. The charcoal basket accessory helps confine coals to one side.
3. Place meat above water pan.
4. Place fire grate in low position.
5. Close lid & control heat with dampers & adjustable grate.

- You may want to sear certain foods before smoking by placing meat directly above coals with LID open and FIRE GRATE in high (hot) position for several minutes. Add flavor soaked wood chips to the fire and add 1 part marinade, beer, or wine to 3 parts water to the drip pan.
- OPENING THE SMOKING CHAMBER WILL EXTEND COOKING TIME. Cooking with meat thermometer ensures food is fully cooked. Insert thermometer into thickest part not touching bone, and allow five minutes to register. Internal temperature for birds should be 170°F to 180°F or when leg moves easily in joint. Meat should be cooked to internal temperature of 140°F for rate, 160°F for medium and 170°F for well done. Check the water level when cooking more than 4 hours or when you can't hear the water simmering. Add water by moving meat over and pouring water through GRILL into WATER PAN.
- IF THE SMOKE IS WHITE, THE FIRE'S RIGHT. IF THE SMOKE IS BLACK, ADD SOME DRAFT.

SMOKED TURKEY:

- Empty cavity rinse and pat dry with paper towel.
- Tuck wing tips under the back and tie legs together.
- Place in center of cooking grid directly above foil drip pan of water.
- Smoke for 12 minutes per pound. Allow several extra minutes per pound if stuffed to allow for expansion.
- Use a meat thermometer for best results (190F internal).

SMOKED BAKED HAM:

You can smoke fully cooked canned ham or smoked and cured whole ham or shank or butt portion.

Glaze

1 cup of light brown sugar, firmly packed
1/2 cup orange juice
1/2 cup honey

- Combine sugar, juice and honey. Let glaze sit for at least 4 hours.
- Place fire grate in the lowest position and a drip pan under the meat.
- Remove rind and score fat diagonally to give a diamond effect.
- Insert a whole clove into the center of every diamond.
- Place ham with fat side up in center of cooking grid directly above drip pan. Close lid.
- About 9 minutes per pound is suggested for fully cooked hams. Smoked or cured ham, which is not fully cooked, should be cooked to an internal temperature of 160°F.

- Baste with ham glaze 3 or 4 times during last 30 minutes of cooking time.
- Garnish with pineapple rings about 15 minutes before end of cooking time.

SMOKED HOT DOGS STUFFED:

- Slit hot dogs lengthwise, within 1/4 inch of each end.
- Stuff hot dogs with cheese and relish and wrap in bacon.
- Place on cooking grid over drip pan and smoke 15-20 minutes or until bacon is crisp.

SMOKED CHICKEN PARTS AND HALVES:

- Rinse pieces in cold water and pat dry with paper towels.
- Brush each piece with vegetable oil and season to taste with salt and pepper.
- Brown pieces directly above coals with lid open and grate in high or medium position for several minutes.
- Then place pieces on cooking grate directly above drip pan.
- With the grate in the low position, cook with lid down for 55 to 60 minutes or until done. Do not use vegetable oil or salt and pepper if using marinade.

SMOKED VENISON:

Venison Marinade:

1 cup Balsamic or wine vinegar
1 cup olive oil
2 oz. Worcestershire
1/2 oz. Tabasco
2 tbsp. Season All
1-2 chopped jalapenos
3 oz. soy sauce

Bacon Marinade

2 oz. wine vinegar
2 oz. Worcestershire
4 dashes Tabasco

- Place leg of venison in a container or “hefty bag” and marinate for 2-4 days, turning daily. Marinate bacon overnight in its marinade.
- Remove roast from refrigerator at least an hour before cooking.
- Season generously with seasoned salt and coarse ground black pepper.
- Wrap 1 lb. Bacon over the top of the roast, and smoke 20/25 minutes per pound, or until tender. Do not overcook.

SMOKED SHRIMP & CRAYFISH:

- Mix in a foil pan 1/2 cup butter, two cloves of crushed garlic, Tabasco, sliced green pepper, 1 tablespoon each of minced onions, salt and juices from one lemon.

- Add shrimp and/ or crayfish and smoke 45 minutes.

SMOKED VEGETABLES:

- Turnips, potatoes, carrots, okra, mushrooms, peeled onions, zucchini, squash, etc.
- Put in pan and cover with water and cook for several hours while cooking the meat. Or place vegetables on grill and smoke for 50 minutes, either wrapped in foil or not.

SMOKED FISH:

- Marinate in brine (1/4 cup dissolved in 1 qt of water) or marinate fish in 1 cup white wine, 1 cup soy sauce mixed with 1 cup lemon juice.
- Marinate overnight in covered dish in refrigerator.
- Let air on rack 20 minutes before placing on Pam-sprayed grill.
- Smoke 25 minutes.

SMOKED SPARE/BACK RIBS:

- Peel off tough layer of skin on back side.
- Rub all surfaces with seasoning.
- Place ribs in center of grid above drip pan and smoke approximately 1 1/2 hours or until meat pulls away from bone.
- Baste with barbecue sauce during last 30 minutes.

CHICKEN MARINADE:

Combine

1/2 cup soy sauce
1/4 cup vegetable oil
1/4 cup red wine vinegar
1 teaspoon oregano
1/2 teaspoon sweet basil
1/2 teaspoon garlic powder with parsley
1/4 teaspoon pepper

- Pour over chicken pieces in non-metal dish
- Cover and refrigerate overnight, turning occasionally. Use marinade to baste chicken while cooking.

MEAT MARINADE: (For steaks, chops, and burgers)

Combine

¼ cup soy sauce
2 coarsely chopped large onions
2 cloves garlic (halved)

- Combine ingredients in an electric blender, cover, and process at high speed 1 minute or until

mixture is very smooth.

- Stir in 1/4 cup bottle gravy coloring (Kitchen Bouquet and Gravy Master) and 2 teaspoons Beau Monde seasoning (or substitute 1 teaspoon MSG and 1 teaspoon seasoned salt).
- Allow meat to stand in marinade at room temperature for 2 hours or refrigerate up to 24 hours in a covered dish.
- Bring meat to room temperature before cooking.

SHISH KABOB MARINADE:

Mix

1 cup soy sauce
1/2 cup brown sugar
1/2 cup vinegar
1/2 cup pineapple juice
2 teaspoons salt
1/2 teaspoon garlic powder

- Mix ingredients and bring to a boil.
- Marinate beef in mixture a minimum of 4 hours.

ACCESSORIES

Warming Rack
Increase Grill Area
Keeps Food Warm

Cover Custom Fit
Weather Resistant
Protects Grill Finish
Cover Accommodates Side
Shelf or Side Fire Box

Charcoal Basket
Confines Coals to One
Side for Smoking
Indirect Cooking

Rotisserie
Excellent for Effortless Grilling
Universal Fit for Any Grill

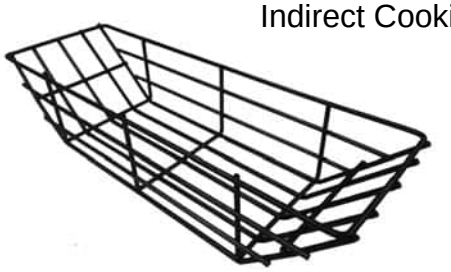

Quick Release
Chimney Starter
E-Z starter with patented
Trigger release
ABS handle with heat shield
Zinc coated galvanized steel
Makes starting charcoal grill
fast and easy

Apron
Machine Washable
Two Front Pockets
Adjustable Straps

Cast-Iron Grates
Heavy-duty Durability
Authentic BBQ Flavor
Non-Warp Design

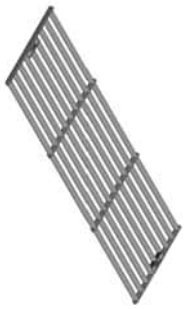

This Page Intentionally Left Blank

For pricing or to order accessories visit:

www.CharGriller.com

Char Griller®
Premier Specialty Brands, LLC,
5367 New Peachtree Road, Suite 150,
Chamblee, GA 30341
www.chargriller.com/pages/customer-support