OWNER'S MANUAL

PROFESSIONAL Char-Griller® GRILLS & SMOKERS

Dual Function 2-Burner Gas & Charcoal Grill™

Model #E5030

Patented

Keep your receipt with this manual for Warranty.

OM_E5030_ED_ A.1 602015 241202-GH

TABLE OF CONTENTS

Safety Warnings & Warranty.....A-1

Assembly Instructions B-1

Product Usage C-1

Recipes D-1

Accessories E-1

Danger

If you smell gas:

1. **Shut off gas to the appliance.**
2. **Extinguish any open flame.**
3. **Open Lid.**
4. **If odor continues, keep away from the appliance and immediately call your gas supplier or your fire department.**

Warning

1. **Do not store or use gasoline or other flammable liquids or vapors in the vicinity of this or any other appliance**
2. **An LP cylinder not connected for use shall not be stored in the vicinity of this or any other appliance**

Warning **For Outdoor Use Only (outside any enclosure)**

PROP 65 WARNING:

Chemicals known to the state of California to cause cancer and birth defects or other reproductive hard are created by the combustion of propane, charcoal, or other wood products.

IMPORTANT SAFETY WARNINGS

A propane gas cylinder is required for operation. This gas grill is not intended for commercial use.

SAVE THESE INSTRUCTIONS FOR FUTURE REFERENCE. IF YOU ARE ASSEMBLING THIS UNIT FOR SOMEONE ELSE, GIVE THIS MANUAL TO HIM OR HER TO SAVE FOR FUTURE REFERENCE.

For use outdoors and in well-ventilated areas, only.

WARNING:

Improper installation, adjustment, alteration, service, or maintenance could cause injury or property damage. Read the installation, operation, and maintenance instructions thoroughly before assembling or servicing this equipment. Failure to follow these instructions could result in fire or explosion that could cause property damage, personal injury, or death.

DANGER:

DO NOT use gas grill for indoor cooking or heating. TOXIC fumes can accumulate and cause asphyxiation. Do not use in or on boats or recreational vehicles.

WARNING:

Accessible parts may be very hot. Keep young children away. Read the instruction literature before using the appliance. The use of unauthorized parts can create unsafe conditions and environment.

NOTE: The use and installation of this product must conform to local codes or, in absence of local codes, the National Fuel Gas Code, ANSI Z223.1/NFPA54.

IMPORTANT NOTICE: Read all instructions prior to assembly and use. Read and understand all warnings and precautions prior to operating your grill.

READ ALL SAFETY WARNINGS AND INSTRUCTIONS CAREFULLY BEFORE ASSEMBLING AND OPERATING YOUR GRILL

California Proposition 65 WARNING:

This product is equipped to operate on propane gas which contains benzene, a chemical known to the State of California to cause cancer and birth defects, or other reproductive harm. This product and combustion by-products produced when using this product contain chemicals known to the State of California to cause cancer and birth defects, or other reproductive harm.

Chemicals known to the State of California to cause cancer and birth defects or other reproductive harm are created by the combustion of propane, charcoal, or other wood products.

Read the following instructions carefully and be sure your barbecue is properly assembled, installed and maintained. Failure to follow these instructions may result in serious bodily injury and/or property damage. If you have any questions concerning assembly or operation, consult your dealer or LP gas company.

- When used, always place the appliance and gas bottle on flat level ground. Grill can be used with 20lb gas cylinder. Grill will perform better if propane or LPG mixtures are used. Butane can be used, but because of the rate of the appliance the cylinder will tend to freeze and supply gas at reduced pressures, affecting grill performance.
- DO NOT move the appliance during use.
- DO NOT attempt to disconnect any gas fittings while barbecue is in use.
- DO NOT use gas bottle if the bottle and/or valve are damaged, rusty, or dented as this may be hazardous. Contact your supplier to have it checked.
- DO NOT lean over an open grill and be mindful of hands/fingers near the edge of the cooking area.
- Should a fire occur, turn off all gas burners, close the lid, and stand back from grill until fire is out.
- Should flames go out while in operation, turn off all gas valves and leave lid open.
- Return to grill after five minutes and try to relight the burners – following lighting instructions. Keep children and pets away from grill when in use. Some parts of the grill will become very hot.
- When cleaning the valves and burners, be careful not to stretch the valve orifices or burner ports.
- Move gas hoses as far away as possible from hot surfaces and dripping hot grease.
- Gas may still be present in a cylinder that appears to be empty. Adhere to proper transportation/ storage of the cylinder at all times.
- If gas is leaking from cylinder, move away from cylinder immediately and call your gas supplier or fire department. DO NOT try to address problem yourself.
- DO NOT use a flame to check for gas leaks.
- DO check for gas leaks and any obstructions to burners before use. This is especially important after a period of storage or non-use.
- The flexible tube should be changed whenever it is damaged or cracked or by expiration date printed on the tubing. Or, change tube every five (5) years.
- Always connect or replace cylinder in a well-ventilated area, and never in the presence of a flame, spark or heat source.
- Grill must be kept away from flammable materials.
- Turn off gas supply at gas container after use.
- Do not alter this grill in any manner.
- Do not touch metal parts of grill until it has completely cooled (about 45 minutes) to avoid burns, unless you are wearing protective gear (BBQ mittens, pot holders, etc.).
- Note that parts sealed by manufacturer or its agent must not be altered.

- When assembling the grill, position the connection flexible tube so that it is protected against twisting.
- Stay away from any source of ignition when changing gas container.
- When assembling the grill, do not obstruct ventilation openings of grill's container compartment. We reserve the right to make minor technical adjustments to the device.
- When cooking with oil/grease, do not allow the oil/grease to exceed 350°F (177°C). Do not store or use extra cooking oil in the vicinity of this or any other appliance.
- Never fill the cylinder beyond 80% full. Not following the above information exactly may result in a fire causing death or serious injury.

CAUTION

- This grill is for use with propane gas only (propane gas cylinder not included).
- Never attempt to attach this grill to the self-contained propane system of a camper trailer, motor home or house.
- Do not use gasoline, kerosene or alcohol for lighting. The LP gas supply cylinder must be constructed and marked in accordance with the specifications for propane gas cylinders of the U.S. Department of Transportation (DOT) CFR 49.
- This grill is not intended for use on recreation vehicles and/or boats.
- Do not use grill unless it is completely assembled and all parts are securely fastened and tightened.
- Keep all combustible items and surfaces at least 36 inches (91.4cm) away from grill at all times.
- DO NOT use this grill or any gas product near unprotected combustible constructions.
- Do not use in an explosive atmosphere. Keep grill area clear and free from combustible materials, gasoline and other flammable vapors and liquids.
- Never keep a filled container in a hot car or car trunk. Heat will cause gas pressure to increase, which may open relief valve and allow gas to escape.
- Keep grill's valve compartment, burners and circulating air passages clean. Inspect grill before each use.

WARNING

- This grill is for outside use only, and should not be used in a building, garage, or any other enclosed area.
- The use of alcohol, prescription or non-prescription drugs may impair the operator's ability to properly assemble or safely operate the grill.
- Always open grill lid slowly and carefully as heat and steam trapped within the grill can burn you severely.
- Always place grill on a hard, level surface far away from combustibles. An asphalt or blacktop surface may not be acceptable for this purpose.

- Do not leave a lit grill unattended. Keep children and pets away from grill at all times.
- Do not place grill on any type of tabletop surface.
- Do not use grill in high winds.
- Disconnect the propane tank (LP tank) by first turning off valve on top of propane tank, turn off burner valves, then disconnect regulator from valve on propane tank by turning plastic connector counter clockwise. Unscrew wing-bolt in bottom shelf to release the tank for removal.

DANGER

- Liquid propane (LP) gas is flammable and hazardous if handled improperly. Know its characteristics before using any propane product.
- Propane Characteristics: flammable, explosive under pressure, heavier than air and settles in pools and low areas.
- In its natural state, propane has no odor. For your safety, an odorant has been added.
- Contact with propane can cause freeze burns to skin.
- Never use a propane cylinder with a damaged body, valve, collar or footing.
- Dented or rusted propane cylinders may be hazardous and should be checked by your propane gas supplier.
- Use caution when assembling and operating your grill to avoid scrapes or cuts from sharp edges.
- Do not use gasoline, kerosene, or alcohol to light charcoal. Use of any of these or similar products could cause an explosion possibly leading to severe bodily injury.
- Use caution when moving grill to prevent strains.
- When adding charcoal and/or wood, use extreme caution.
- Never move grill when it is in use or when it contains hot coals or ashes.
- WARNING: To avoid injuries gloves or other protective articles should be used when touching the ash pan hangers.
- Do not exceed a temperature of 400°F.
- Do not allow charcoal and/ or wood to rest on the walls of grill. Doing so will greatly reduce the life of the grill.
- CAUTION: Exposed metal dampers on air vents and and/or metal handles are hot during usage. Again, always wear oven mitts when adjusting air flow to protect hands from burns.
- When opening lid, make sure it is pushed all the way back so it rests against the lid support brackets. Use extreme caution as hood could fall back to a closed position and cause bodily injury.
- Close lid and all dampers to help suffocate flame.
- Always hold an open lid from the handle to prevent it from closing unexpectedly.
- Never leave coals and ashes unattended. Before grill can be left unattended, coals and ashes must be removed. Use caution to protect yourself and property.

- Ashes left in bottom of charcoal grill hold moisture and may cause rust if not cleaned out.
- Carefully place remaining coals and ashes in a noncombustible metal container and saturate completely with water. Allow coals and water to remain in metal container 24 hours prior to disposing.
- Make sure to empty grease tray after every use once completely cooled.
- Heat guages maintain moisture, which will result in steam during cooking.
- Smoke will escape from other areas than smokestacks. This will not affect cooking.
- It is recommended that charcoal grill be heated up and fuel kept red hot for at least 30 minutes prior to first time cooking. Do not cook before briquettes have turned gray with ash.
- WARNING! Do not use spirit or petrol when lighting or relighting.
- To protect against bacteria that could cause illness, keep all meats refrigerated and thaw in refrigerator or microwave. Keep raw meats separate from other foods, and wash everything that comes in contact with raw meat.
- Cook meat thoroughly, and refrigerate leftovers immediately.
- Use a calibrated food thermometer and the USDA guidelines to ensure that meat, poultry, seafood, and other cooked foods reach a safe minimum internal temperature.
- Always have a fire extinguisher near at all times. Maintain and check your fire extinguisher regularly.
- Non-rechargeable batteries are not to be recharged
- Do not mix different types of batteries such as alkaline, carbon-zinc, or rechargeable batteries.
- Do not mix old and new batteries
- Exhausted batteries are to be removed from the product
- Batteries included.
- **DO NOT DISPOSE OF BATTERIES IN FIRE. BATTERIES MAY EXPLODE OR LEAK**

*** STOP! CALL FIRST! ***

Do NOT Return Product to Store.

This grill has been made according to the highest of quality standards. If you have any questions not addressed in this manual or if you need parts please call our Customer Service Department at www.chargriller.com/pages/customer-support and have your serial number handy.

REGISTER YOUR GRILL:

To take full advantage of the Char-Griller warranty be sure to register your grill by visiting www.chargriller.com/pages/customer-support

Registration provides important protections:

1. In the extremely unlikely event of a product recall Char-Griller can easily contact you and rectify the issue.
2. If a warrantied part is broken or missing we can send you the needed parts promptly.

NOTE: You will need your model #, serial number, and a copy of the original sales receipt when registering.

Document Your Grill Model and Serial Numbers HERE:
(Model and Serial number are located on the back of the grill body or on the leg.)

_____ _____

(MODEL #) **(SERIAL #)**

(example)

WARRANTY INFORMATION

A COPY OF THE DATED PROOF OF PURCHASE (RECEIPT) IS REQUIRED WHEN REGISTERING OR SUBMITTING A WARRANTY* CLAIM. PLEASE RETAIN A COPY OF THE RECEIPT FOR YOUR RECORDS.

Char-Griller will replace any defective part of its grillers/smokers, under warranty, as outlined below.

PLEASE READ THIS INFORMATION IN DETAIL AND IF YOU HAVE ANY QUESTIONS CONTACT CUSTOMER SERVICE AT www.chargriller.com/pages/customer-support

Charcoal / Pellet / Kamado Grills	
Grill - Hood AND Bottom (excludes removable Ash Pan)	5 years from date of purchase for rust through / burn through
Ash Pan AND Defective Parts	1 year from date of purchase
Gas Grills	
Grill Hood (TOP half) AND Main Burner Tubes (exckudes Side Burner)	5 years from date of purchase for rust through / burn through
Grill Body (BOTTOM half) AND Side Burner AND Defective Parts	1 year from date of purchase
Dual Fuel Grills (Gas & Charcoal)	
Charcoal Grill - Hood AND Bottom AND Gas Grill Hood (TOP half) AND Main Burner Tubes (excludes Ash Pan and Side Burner)	5 years from date of purchase for rust through / burn through
Ash Pan AND Defective Parts AND Gas Grill Body (BOTTOM half) AND Side Burner	1 year from date of purchase
Parts, Accessories, and Grill Covers	1 year from date of purchase (seam tears only for covers)

SURFACE RUST IS NOT CONSIDERED A MANUFACTURING OR MATERIALS DEFECT

Char-Griller grills are made of steel and if exposed to the elements rust will occur naturally. Please refer to the section entitled, “Usage” to review how to care for your grill properly.

Surface issues such as scratches, dents, corrosion or discoloring by heat, abrasive and chemical clearers, surface rust or the discoloration of steel surfaces are NOT covered under these warranties.

Warranties are for the replacement of defective parts only. Char-Griller is not responsible for damage resulting from accident, alteration, misuse, abuse, hostile environments, improper installation, and installation not in accordance with local codes of service of unit.

Excluded Under ALL Warranties
Paint; Surface Rust; Heat Damage; Incorrect Parts ordered by customer, including shipping; Worn Parts; Missing or damaged parts not reported within two (2) months of purchase date; Defective parts not reported within one (1) year of purchase date; Fading grill cover.

*NOTE: For warranty claims, photos and prepaid return of the item in question may be required. Misuse, abuse or commercial use nullifies all warranties.

This Page Intentionally Left Blank

PARTS LIST

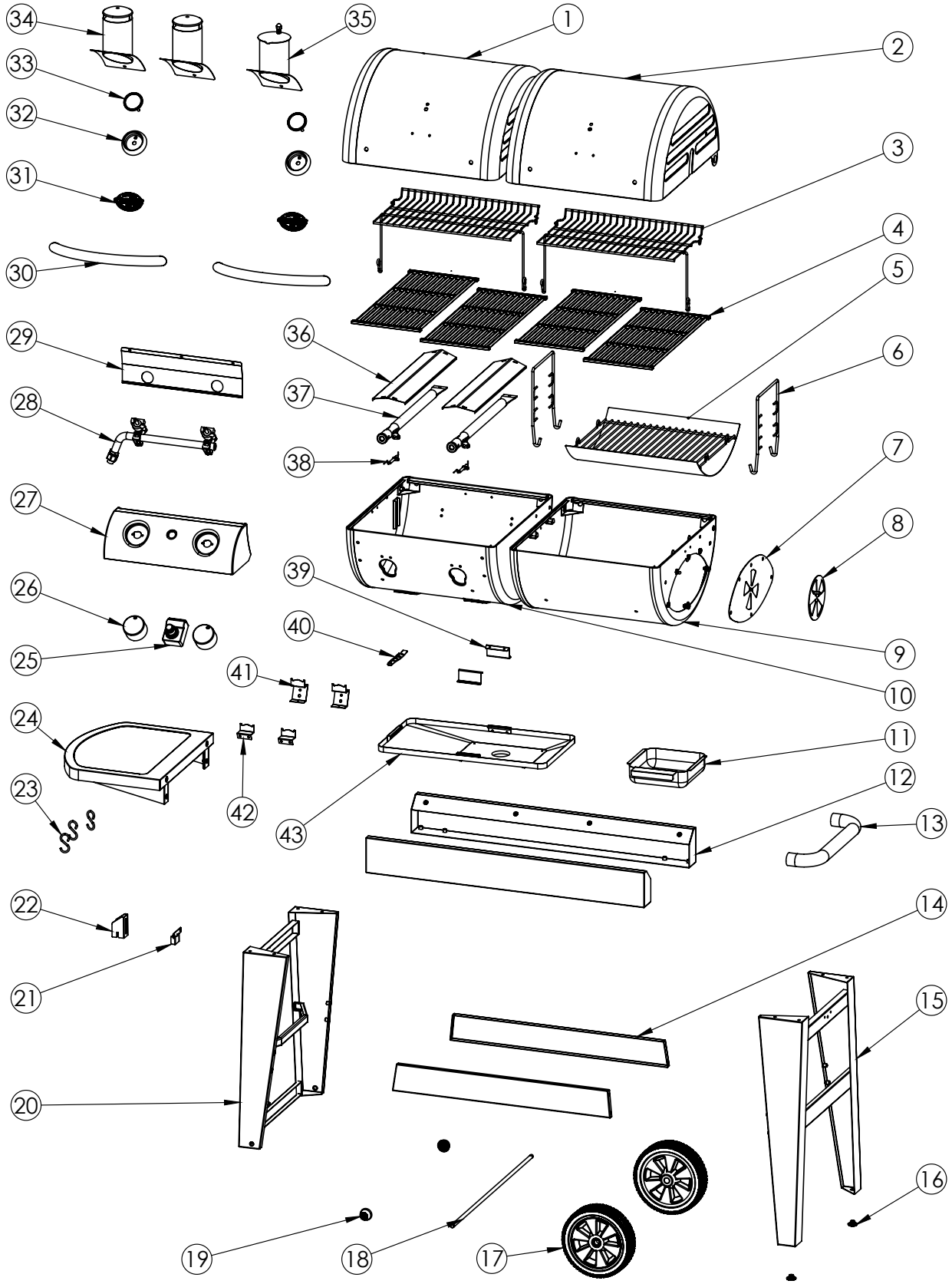
34
35
1
2
33
32
3
31
4
30
5
29
36
6
37
28
38
7
27
8
39
26
9
40
25
10
41
24
11
42
12
23
43
13
22
14
21
15
20
16
19
18
17

PARTS LIST

Item	QTY	Part Description
1	1	GAS GRILL HOOD
2	1	CHARCOAL GRILL HOOD
3	2	WARMING RACK
4	4	COOKING GRATE
5	1	ASH PAN
6	2	ASH PAN HANGER
7	1	FILLER PLATE
8	1	DAMPER CIRCLE
9	1	CHARCOAL GRILL BODY
10	1	GAS GRILL BODY
11	1	GREASE CUP
12	2	CART BRACE
13	1	SIDE HANDLE
14	2	LEG BRACE
15	1	RIGHT LEG
16	2	LEG PAD
17	2	8” WHEEL
18	1	AXLE
19	2	HUB CAP
20	1	LEFT LEG
21	1	TANK SECURE SUPPORT BRACKET
22	1	TANK SECURE BRACKET
23	3	UTENSIL HOOK
24	1	SIDE SHELF
25	1	IGNITOR
26	2	KNOB
27	1	CONTROL PANEL
28	1	MANIFOLD WITH VALVES
29	1	HEAT SHIELD
30	2	HOOD HANDLE
31	2	LOGO PLATE
32	2	THERMOMETER BEZEL
33	2	THERMOMETER
34	2	GAS SMOKESTACK
35	1	CHARCOAL SMOKESTACK
36	2	FLARE UP TENT
37	2	BURNER
38	2	SPARK
39	2	SLIDER BRACKET
40	1	STOPPER BRACKET
41	2	FLARE UP TENT SUPPORT BRACKET,
42	2	FLARE UP TENT SUPPORT BRACKET, FRONT
43	1	REMOVABLE CATCH PAN

HARDWARE AND TOOLS NEEDED

Assembly: Requires 2 people. Get another person to help. Tools Needed: Pliers, Phillips Head Screwdriver and a 7/16” Nut Driver.

NOTE: Do Not tighten any bolts unless instructed to do so. Tightening too soon may prohibit parts from fitting together. All Hex Nuts should be on the inside of the grill unless stated otherwise. Unpack all contents in a well cleared and padded area.
Estimated Assembly Time: 45 minutes

Hardware Pack: 551075

	Hex Bolt--1/4-20 x 1/2”	42		Utensil Hook	3
	Hex Bolt--1/4-20 x 3/4”	5		Hood Hinge Pin	2
	Hex Bolt--1/4-20 x 1 1/4”	4		Screw, #10-24 x 0.40”	6
	Flat Washer--1/4”	10		Screw, Burner	2
	Flat Washer--2/5”	2		Hood Center Hinge Pin	1
	Hex Nut, Flange--1/4-20	21		Hub Cap	2
	Lock Washer--1/4	27		Carriage Bolt	1
	Cotter Pin, Small	3		Wing Nut	1
	Cotter Pin, Large	2			

ASSEMBLY

Step 1

Attach the LEFT LEG WELDED ASSEMBLY and RIGHT LEG WELDED ASSEMBLY to FRONT & BACK CART BRACE ASSEMBLY using eight (8) 1/4-20 x 1/2” HEX BOLTS, eight (8) 1/4” LOCK WASHERS.

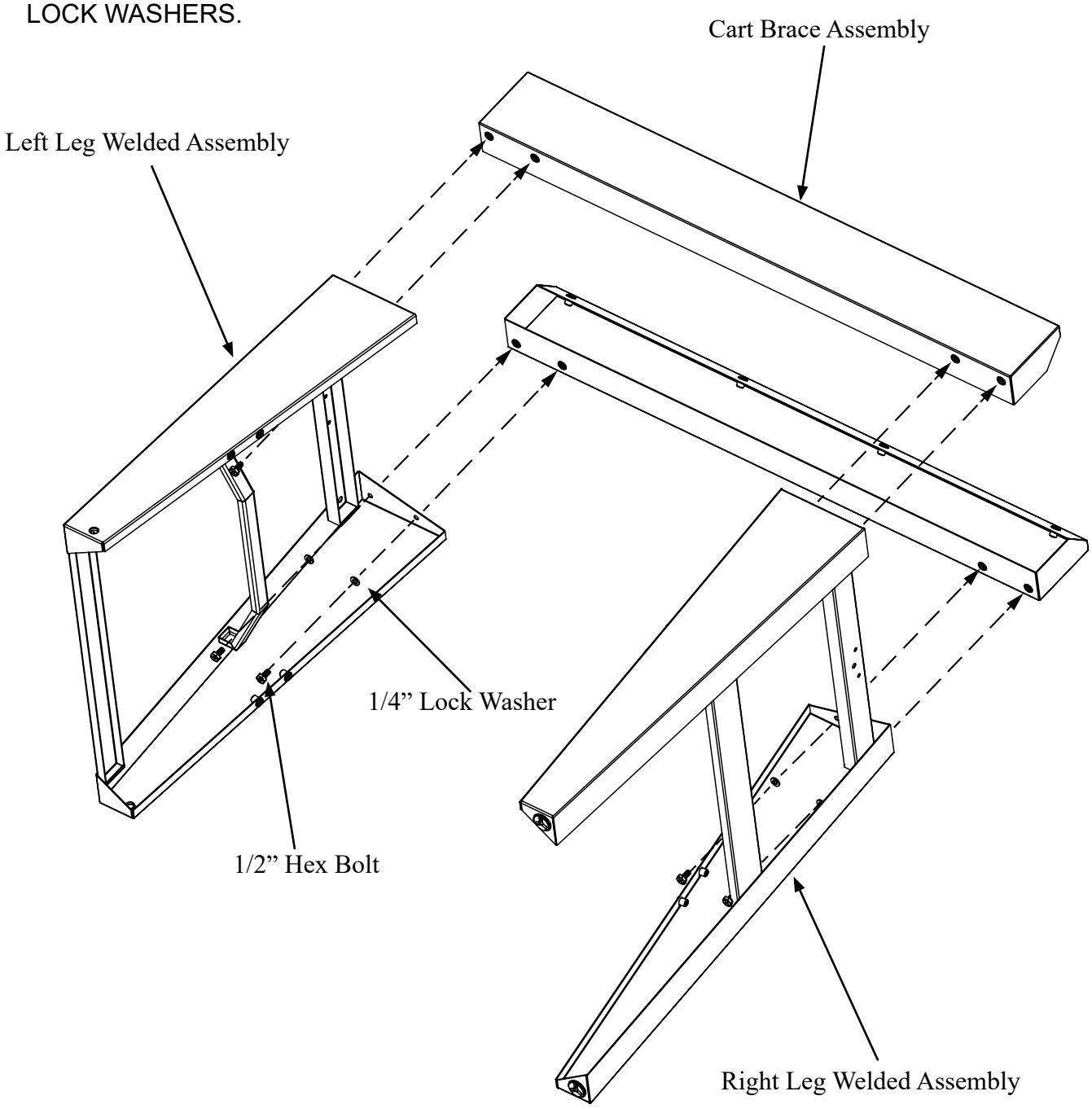

Step 2

Attach FRONT & BACK BRACE to LEFT LEG WELDED ASSEMBLY and RIGHT LEG WELDED ASSEMBLY using eight (8) 1/4-20 x 1/2” HEX BOLTS.

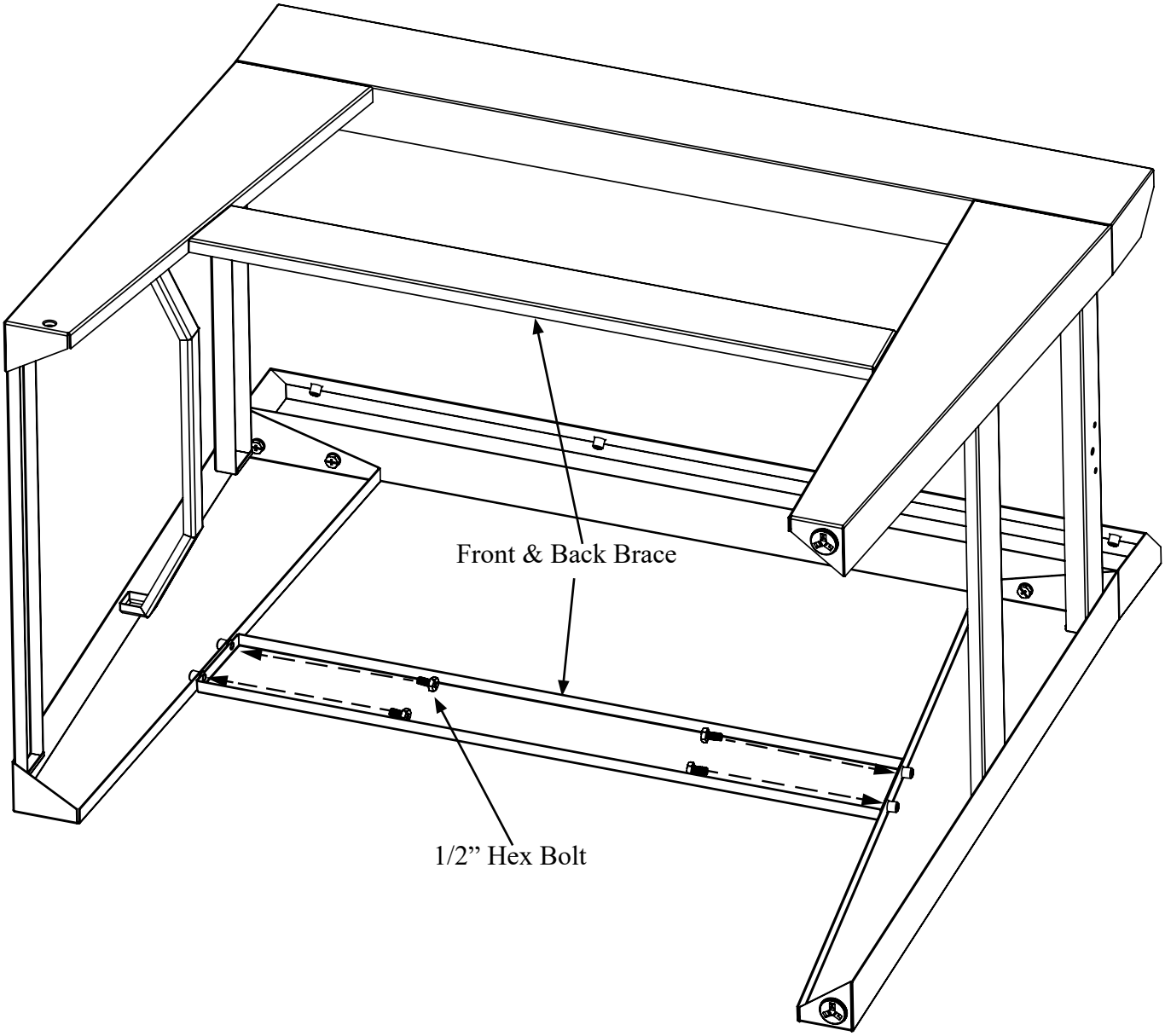

Step 3

Install one (1) 2/5” FLAT WASHER, one (1) COTTER PIN, and one (1) HUB CAP onto the AXLE then slide the AXLE through WHEELS, LEGS as shown. Finish by attaching the 2nd FLAT WASHER, COTTER PIN, and HUP CAP.

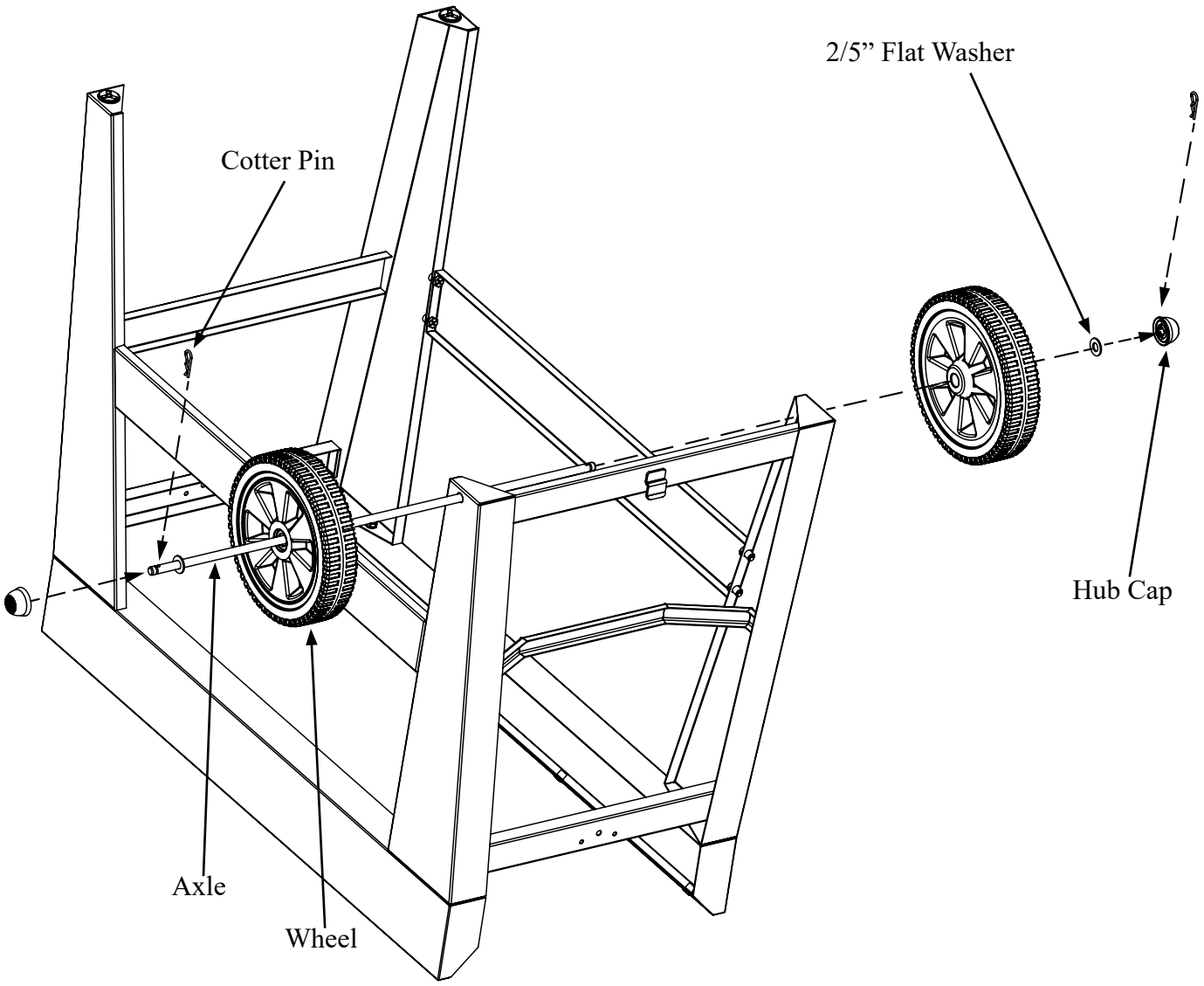

Step 4

Attach CATCH PAN SLIDER BRACKETS and CATCH PAN STOPPER BRACKET to GAS GRILL BODY using six (6) #10-24 x 2/5” SCREWS.

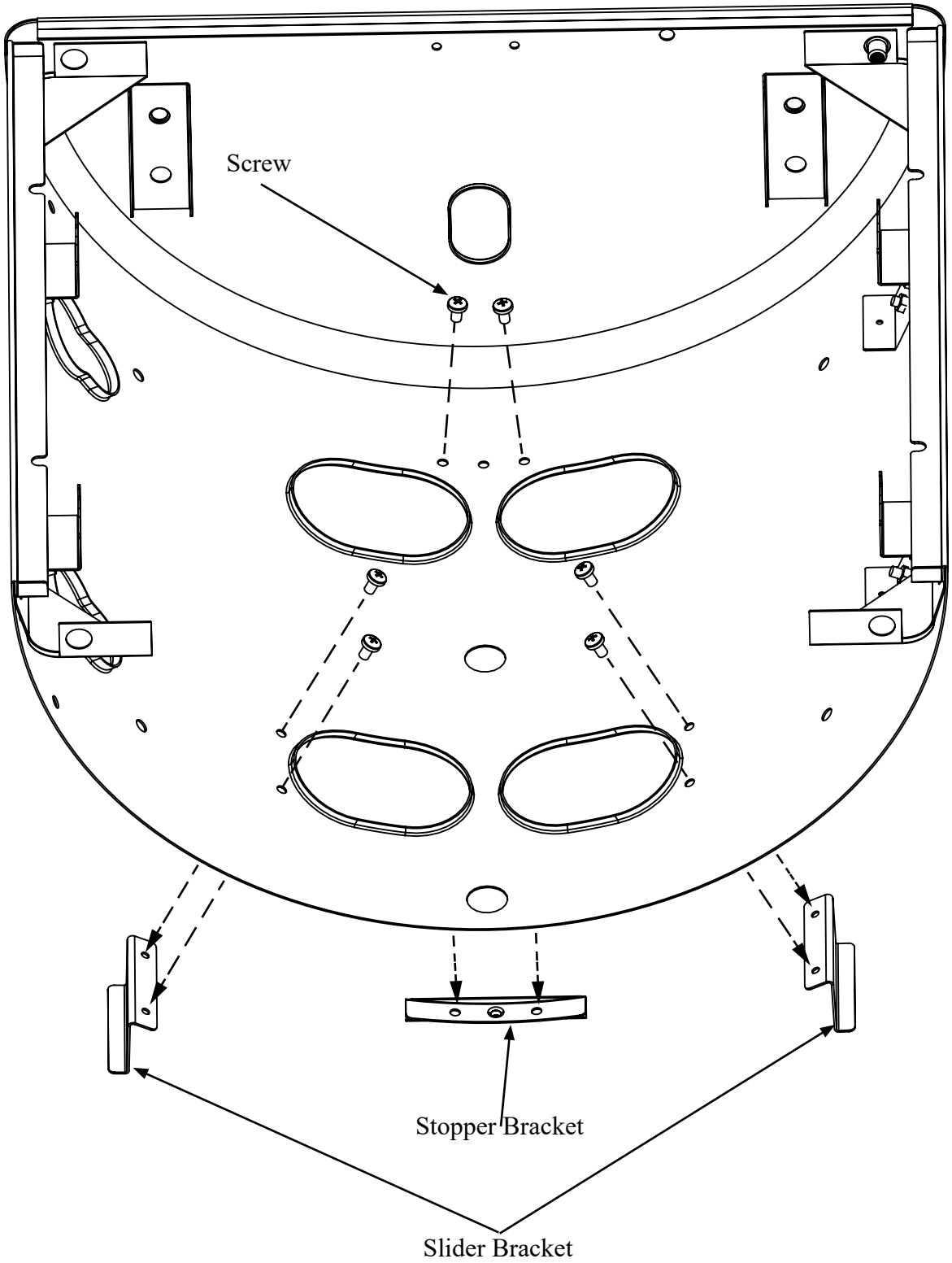

Step 5

Attach GRILL BODIES onto CART using eight (8) 1/4-20 x 1/2” HEX BOLTS, eight (8) 1/4” LOCK WASHERS, and eight (8) 1/4” FLAT WASHERS.

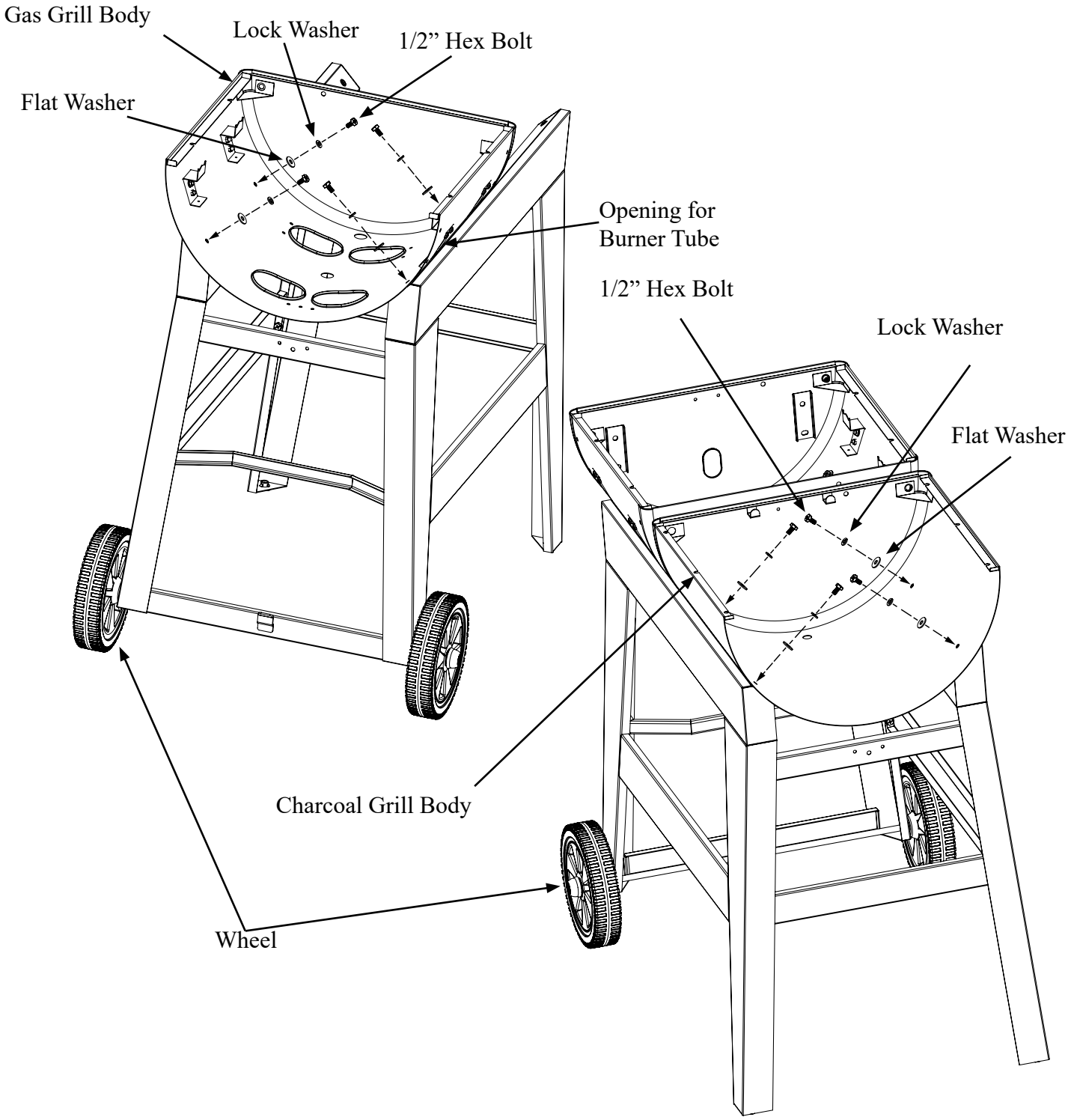

Step 6

Insert REMOVABLE CATCH PAN underneath the GAS GRILL BODY. Making sure that the brackets on the REMOVABLE CATCH PAN rest on top of SLIDER BRACKET. Slide the REMOVABLE CATCH PAN all the way till you can hang the REMOVABLE CATCH PAN side bracket onto the STOPPER BRACKET.

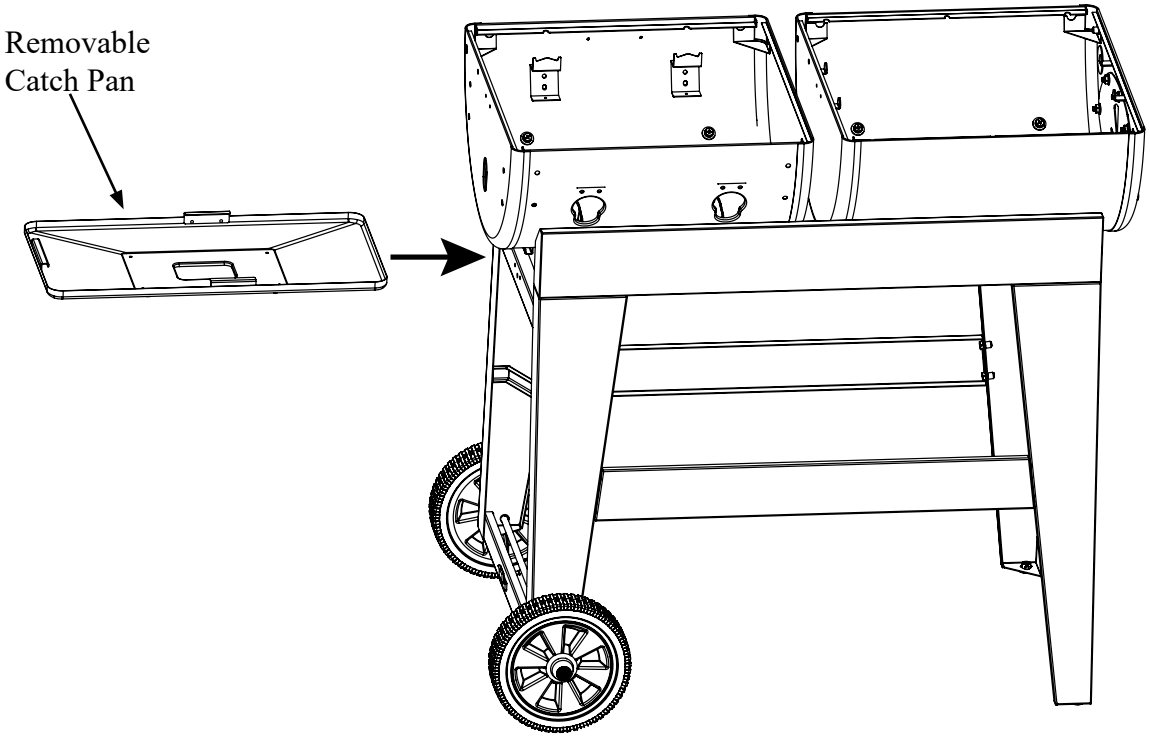

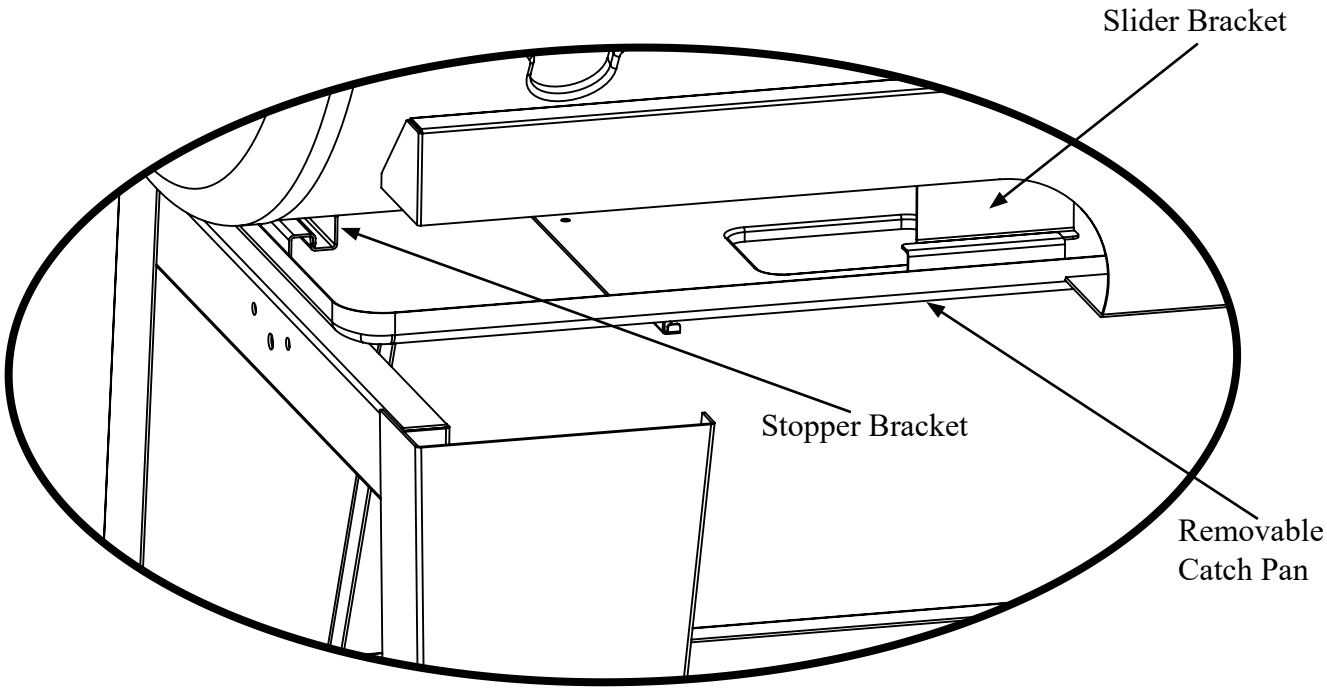

Step 7

Attach CONTROL PANEL to front of GAS GRILL BODY using four (4) 1/4-20 x 1/2” HEX BOLTS and four (4) 1/4” LOCK WASHERS.

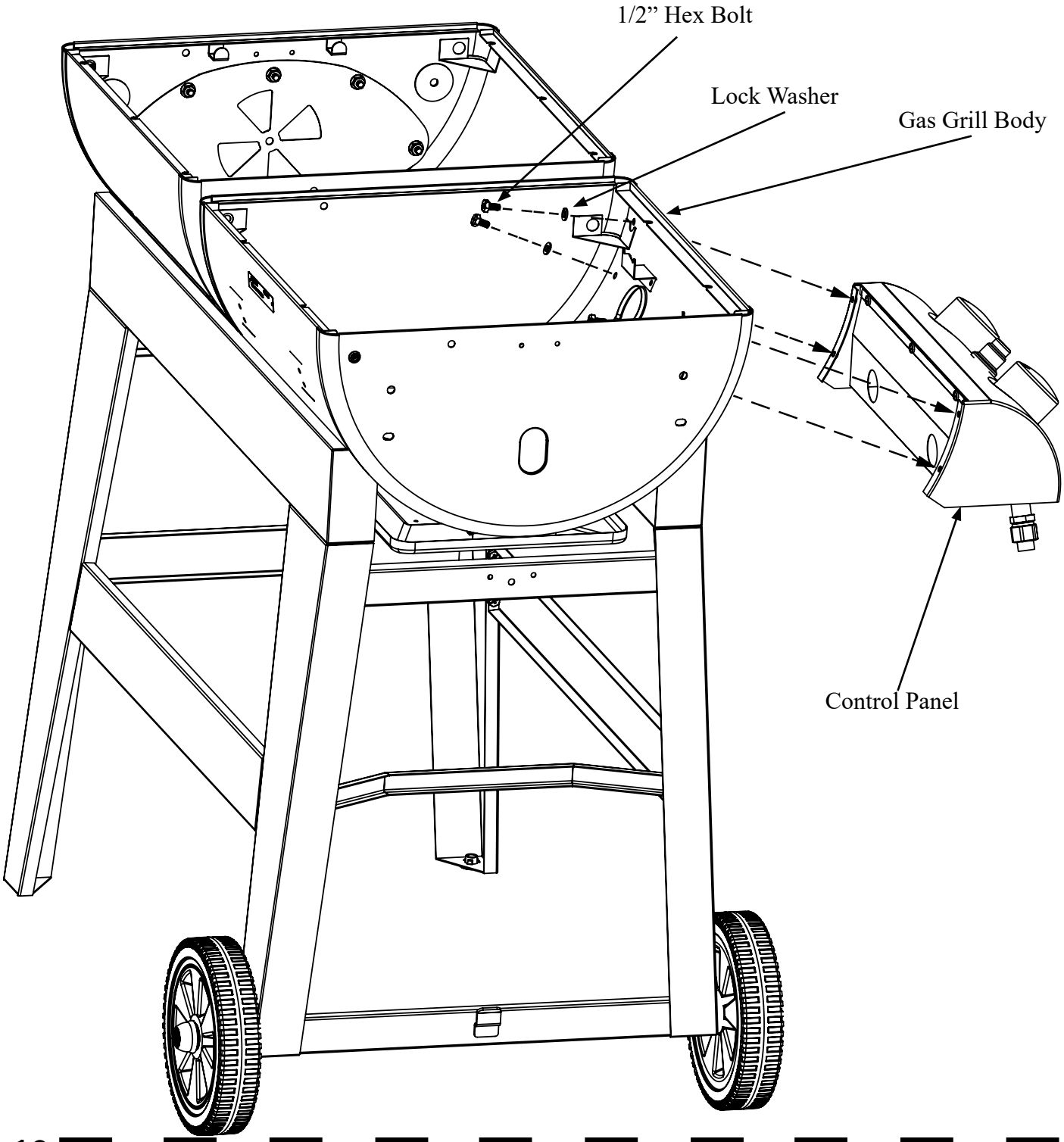

Step 8

Attach SIDE SHELF to GAS GRILL BODY using four (4) 1/4-20 x 1/2” HEX BOLTS and four (4) 1/4” LOCK WASHERS.

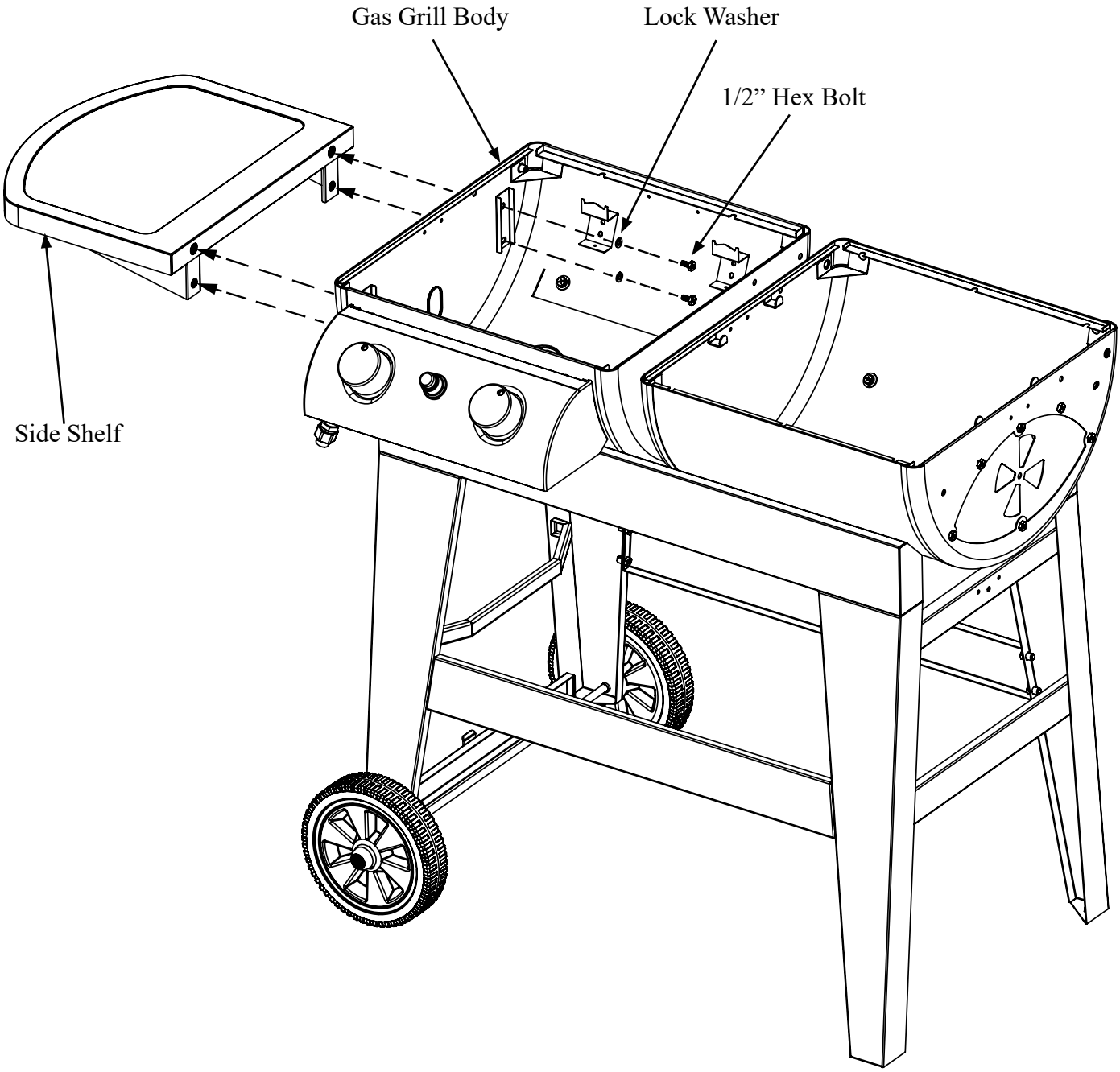

Step 9

Install BURNERS in GAS GRILL BODY by inserting the IGNITER WIRES and BURNERS through the open holes at the front of the GRILL BODY from inside the GRILL BODY. Making sure that the valve goes inside each burner. Secure the BURNERS to the GRILL BODY with the screws provided. Then connect IGNITOR WIRES to IGNITOR RECEPTORS.

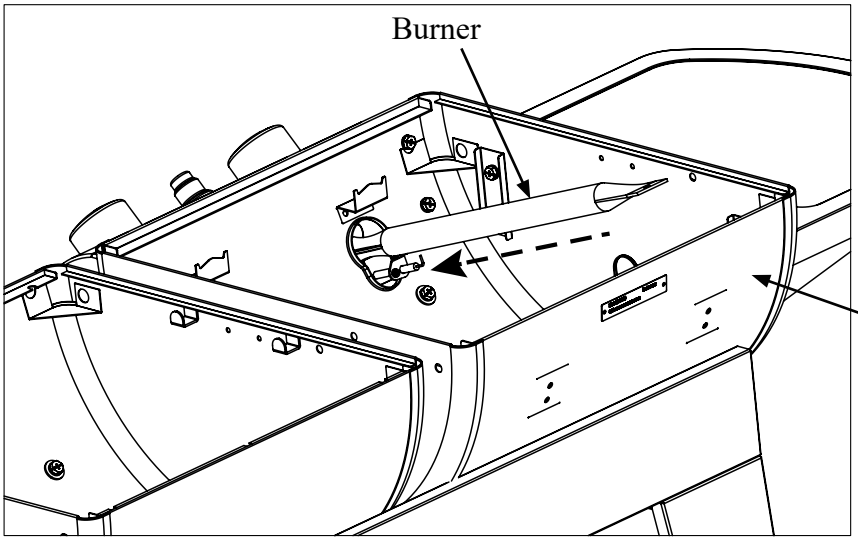

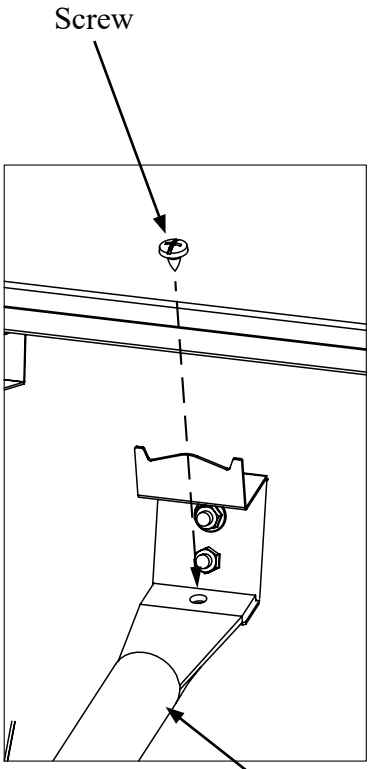

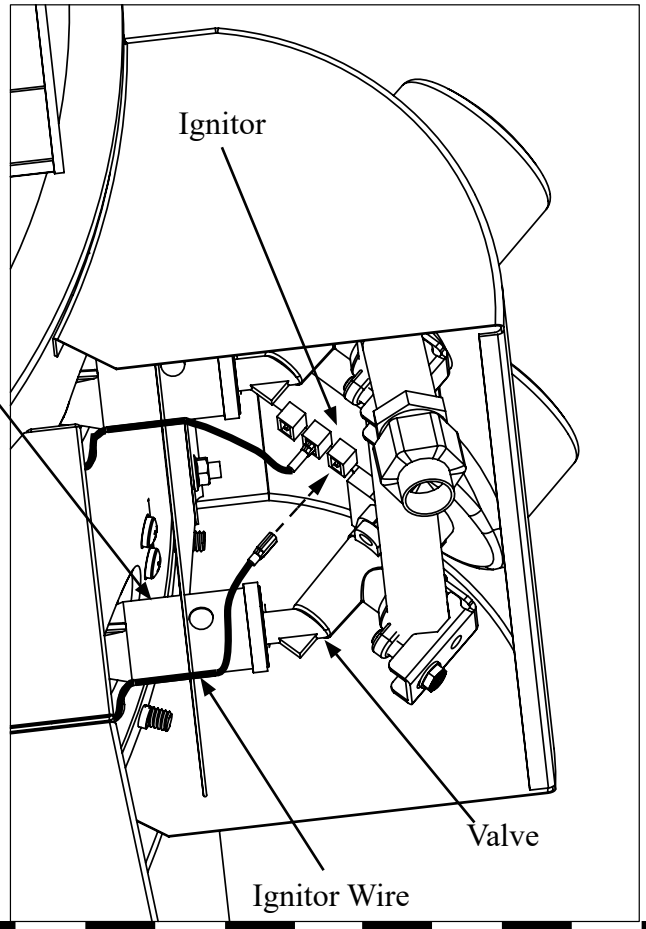

Step 10

Attach DAMPER CIRCLE to the inside of CHARCOAL GRILL BODY using one (1) 1/4-20 x 3/4” HEX BOLT, two (2) 1/4” FLAT WASHERS, one (1) 1/4” LOCK WASHER, and one (1) 1/4-20 FLANGE HEX NUT, see below.

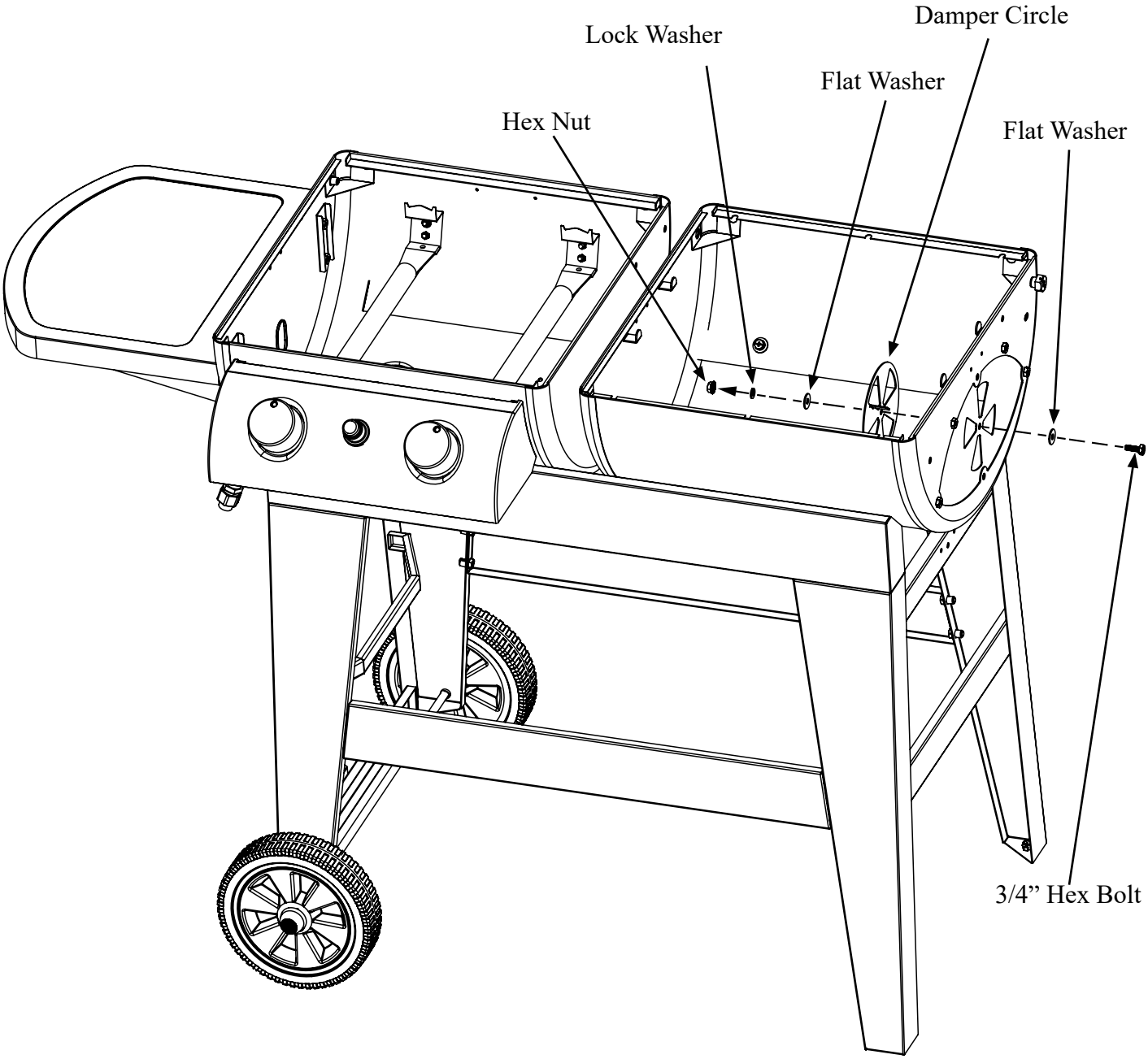

Step 11

Attach SIDE HANDLE to side of CHARCOAL GRILL BODY using two (2) 1/4-20 x 1/2” HEX BOLTS and two (2) 1/4” LOCK WASHERS.

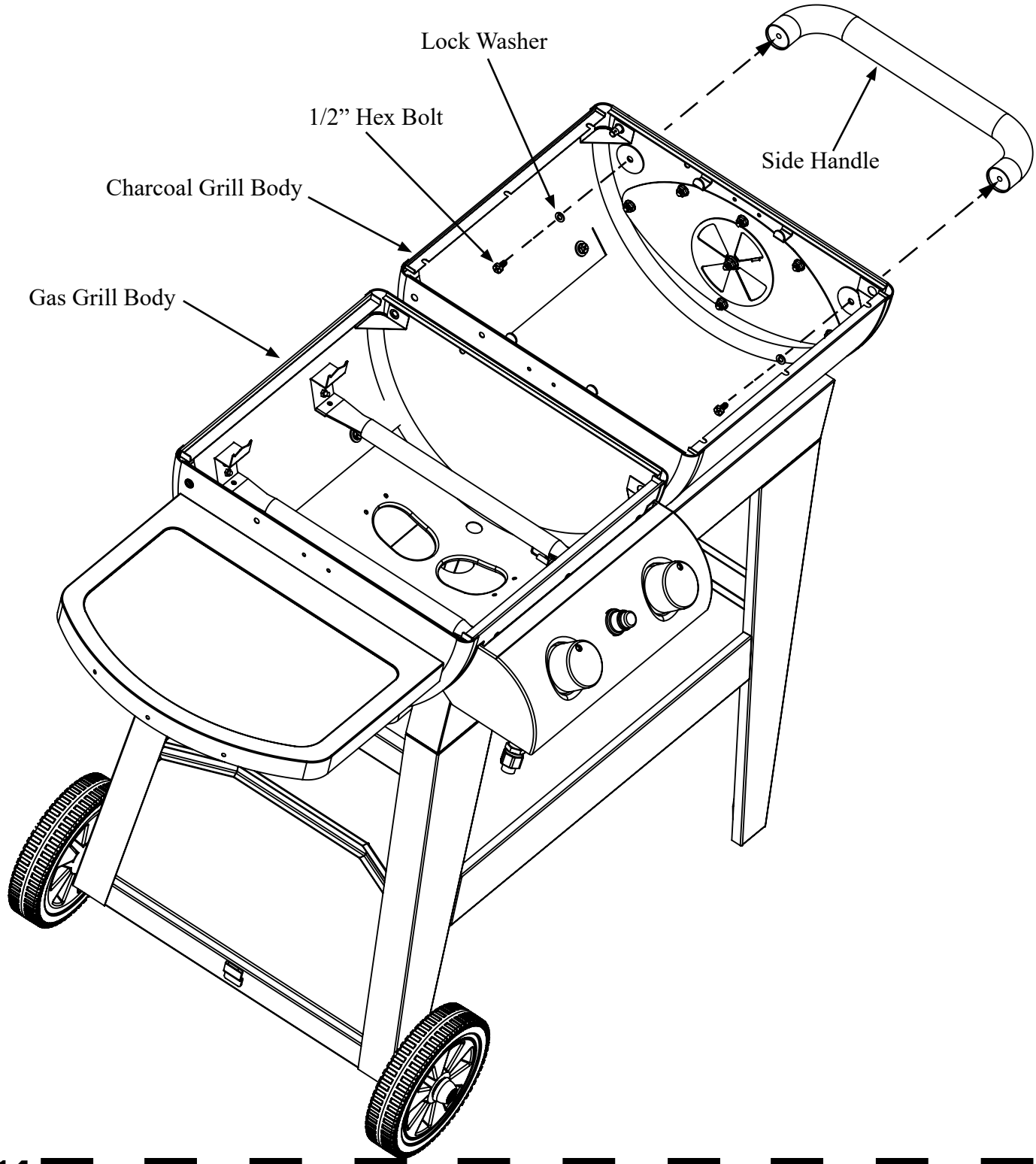

Step 12

Attach HOOD HANDLES to GAS GRILL HOOD and CHARCOAL GRILL HOOD using two (2) LOCK WASHERS and two (2) WING NUTS per Handle. Then attach THERMOMETER and BEZELS to GRILL HOODS. Insert THERMOMETER through BEZEL, GRILL HOOD, and FLAT WASHER then secure with a WING NUT. **NOTE: HANDLE hardware and THERMOMETER come attached on the actual HANDLE and THERMOMETER.**

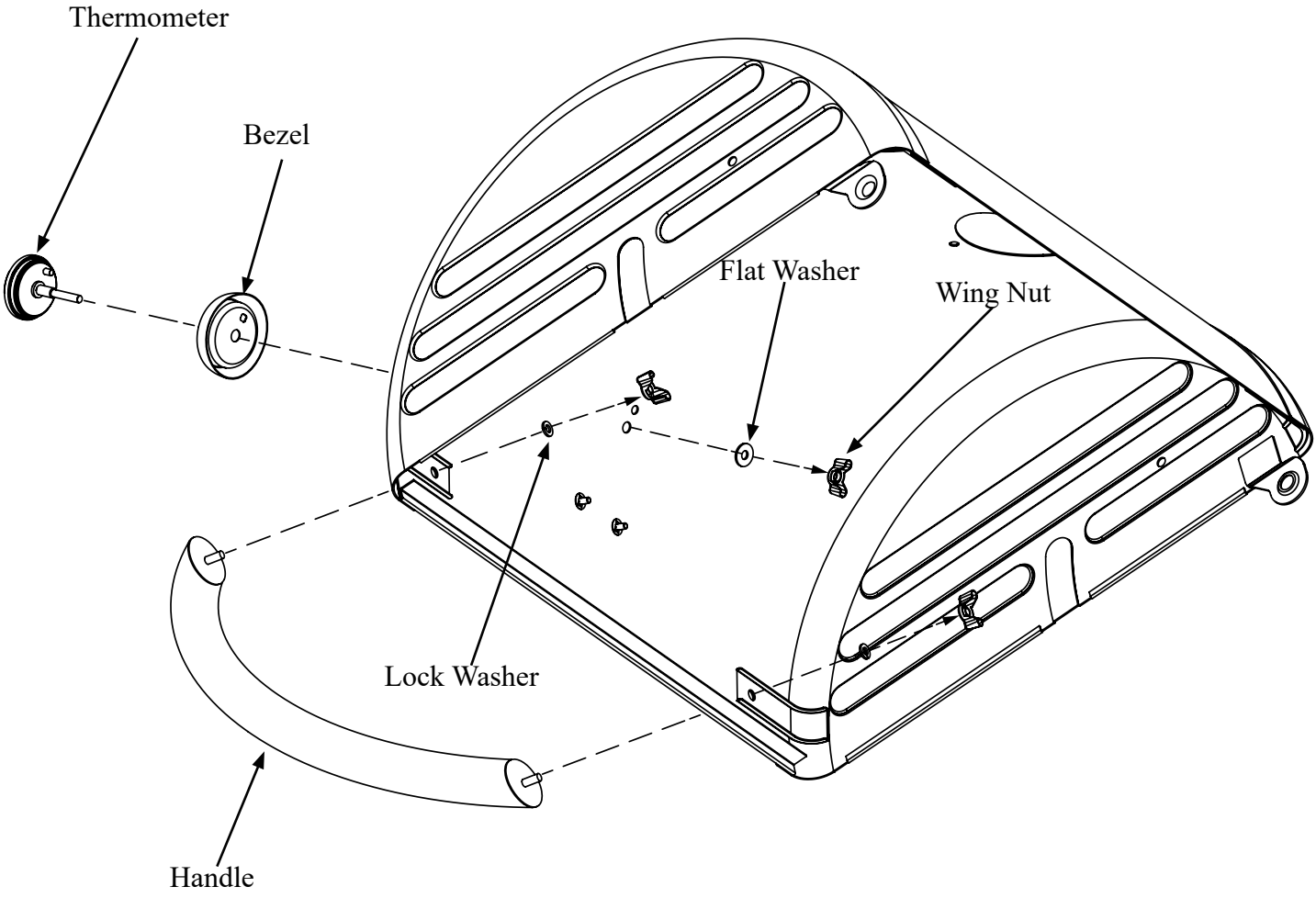

Step 13

Attach two (2) GAS SMOKESTACKS to GAS GRILL HOOD using four (4) 1/4-20 x 1/2” HEX BOLTS and six (6) 1/4-20 HEX NUTS. Then attach one (1) CHARCOAL SMOKESTACK to CHARCOAL GRILL HOOD using two (2) 1/4-20 x 1/2” HEX BOLTS and two (2) 1/4-20 HEX NUTS.

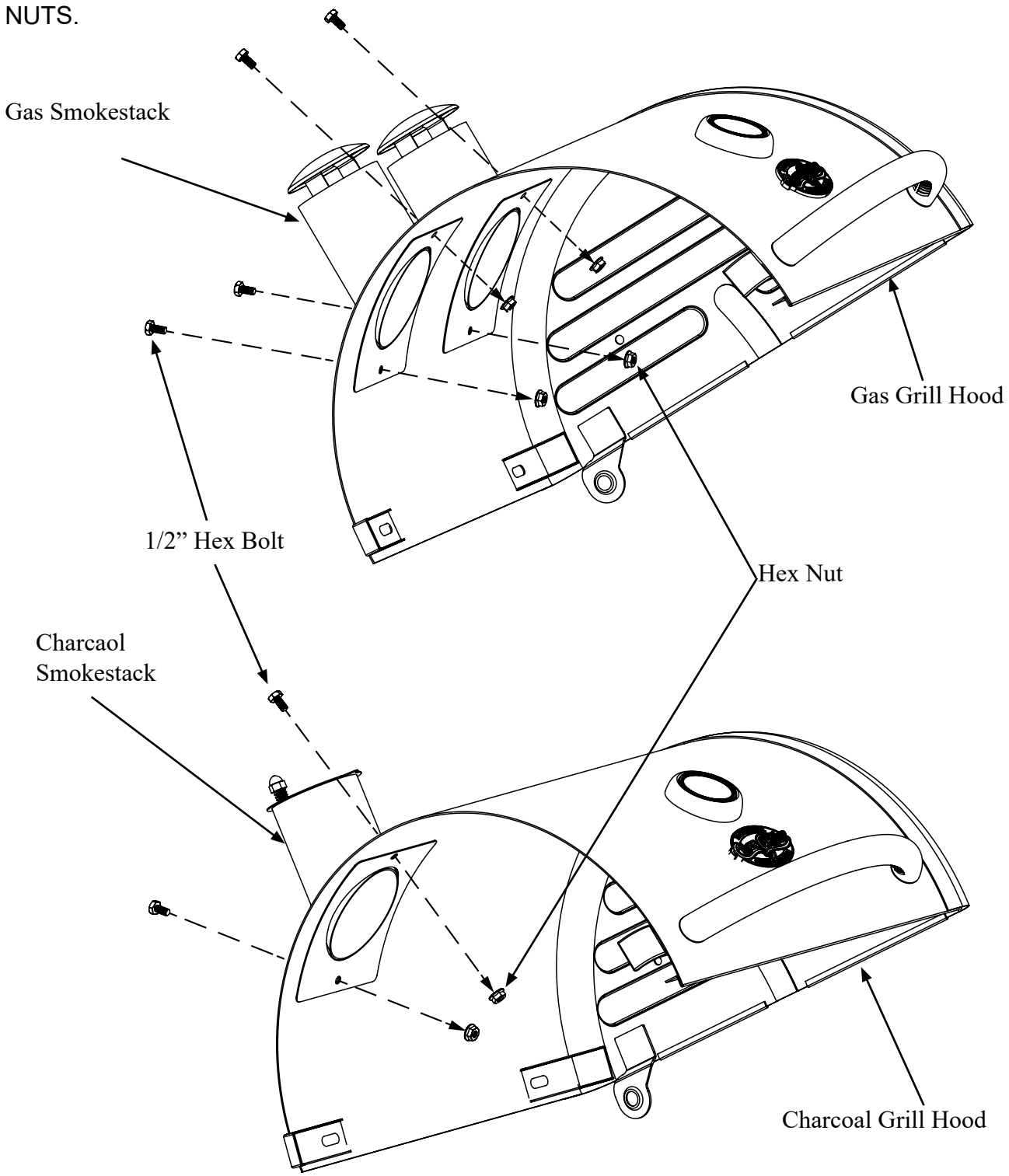

Step 14

Attach GRILL HOODS to GRILL BODIES using two (2) HINGE PINS, three (3) SMALL COTTER PINS, and one (1) CENTER HINGE PIN. TIP: Mount the charcoal hood first, by inserting the center hinge pin from the right. Then position gas hood and slide the center hinge pin through both the charcaol and gas hoods. Secure with cotter pin.

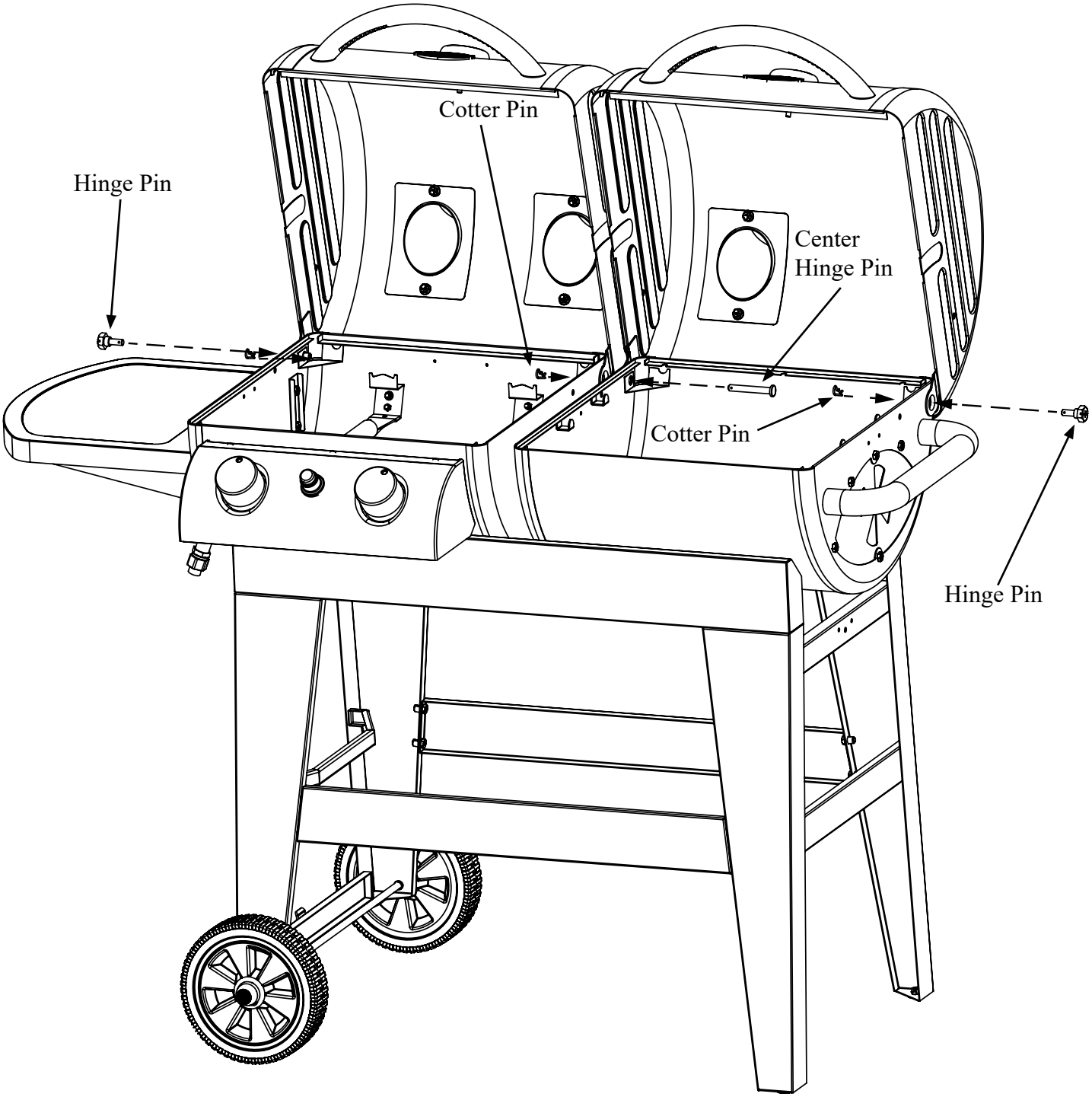

Step 15

Install WARMING RACKS inside the GRILL BODIES. First attach four (4) 1/4-20 x 1 1/4” HEX BOLTS and four (4) 1/4-20 HEX NUTS on GRILL HOODS. Then attach four (4) 1/4-20 x 3/4” HEX BOLTS and four (4) 1/4-20 HEX NUTS ON GRILL BODIES. Position the WARMING RACKS onto the HEX BOLTS and secure them with four (4) 1/4-20 HEX NUTS at the GRILL HOODS. Then position the WARMING RACK SUPPORTS onto the HEX BOLTS on the GRILL BODIES.

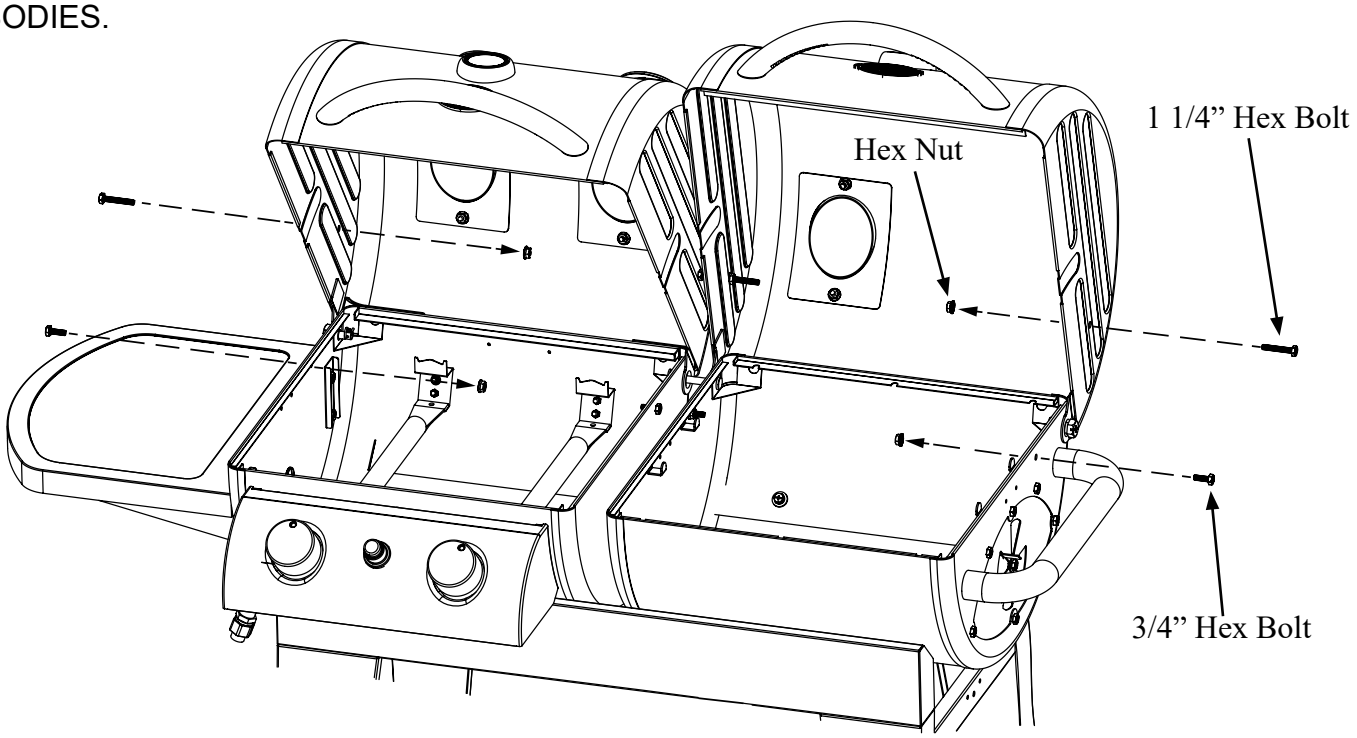

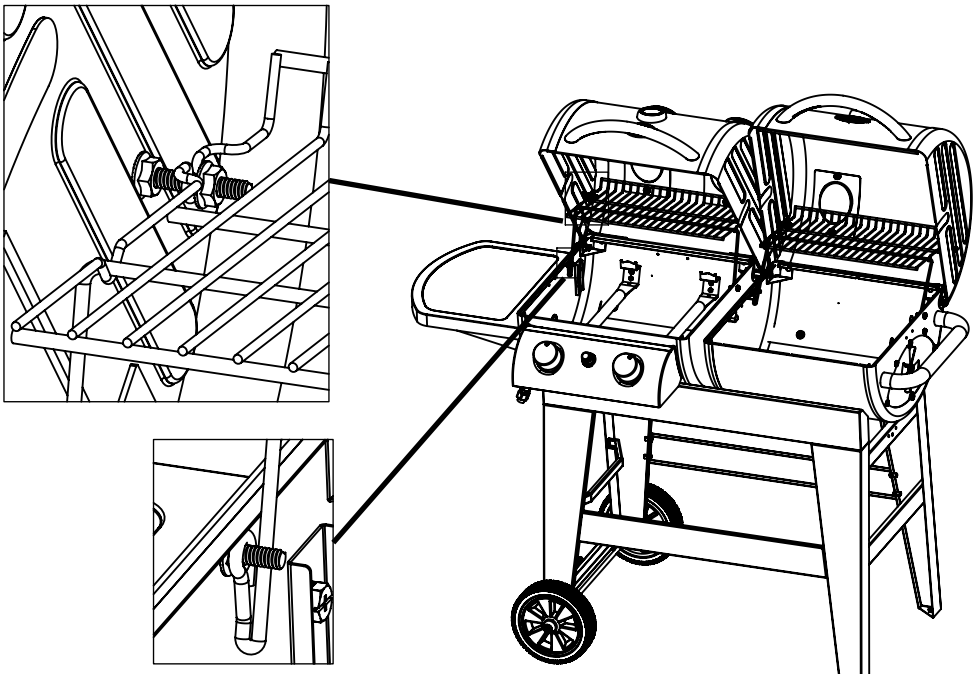

Step 16

Place the FLARE-UP SHIELDS in place over the BURNERS. Then place the ASH PAN into the CHARCOAL GRILL BODY and hang ASH PAN HANGERS on hanger tabs on the side of the CHARCOAL GRILL BODY.

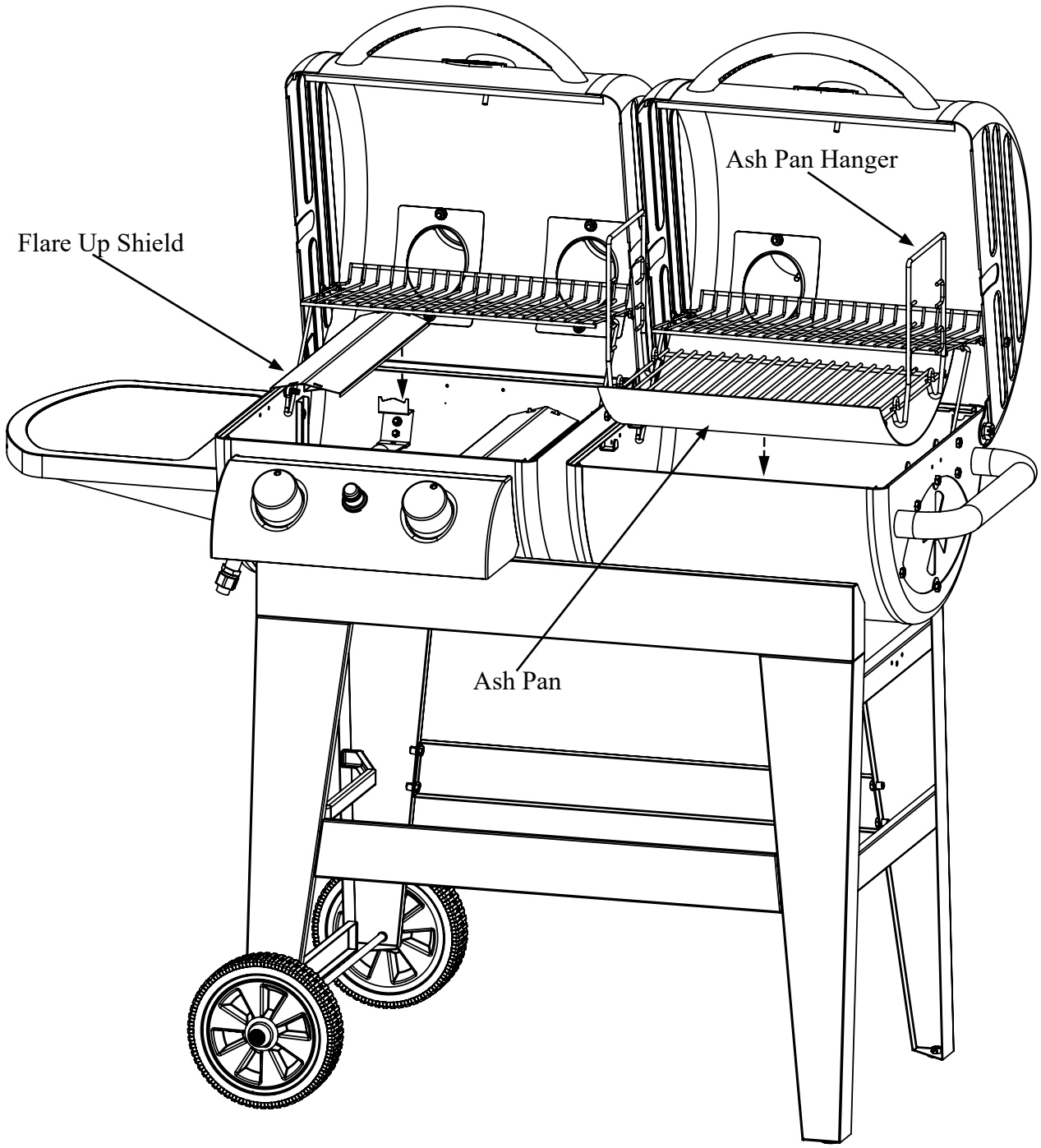

Step 17
Place the COOKING GRATES onto GRILL BODIES.

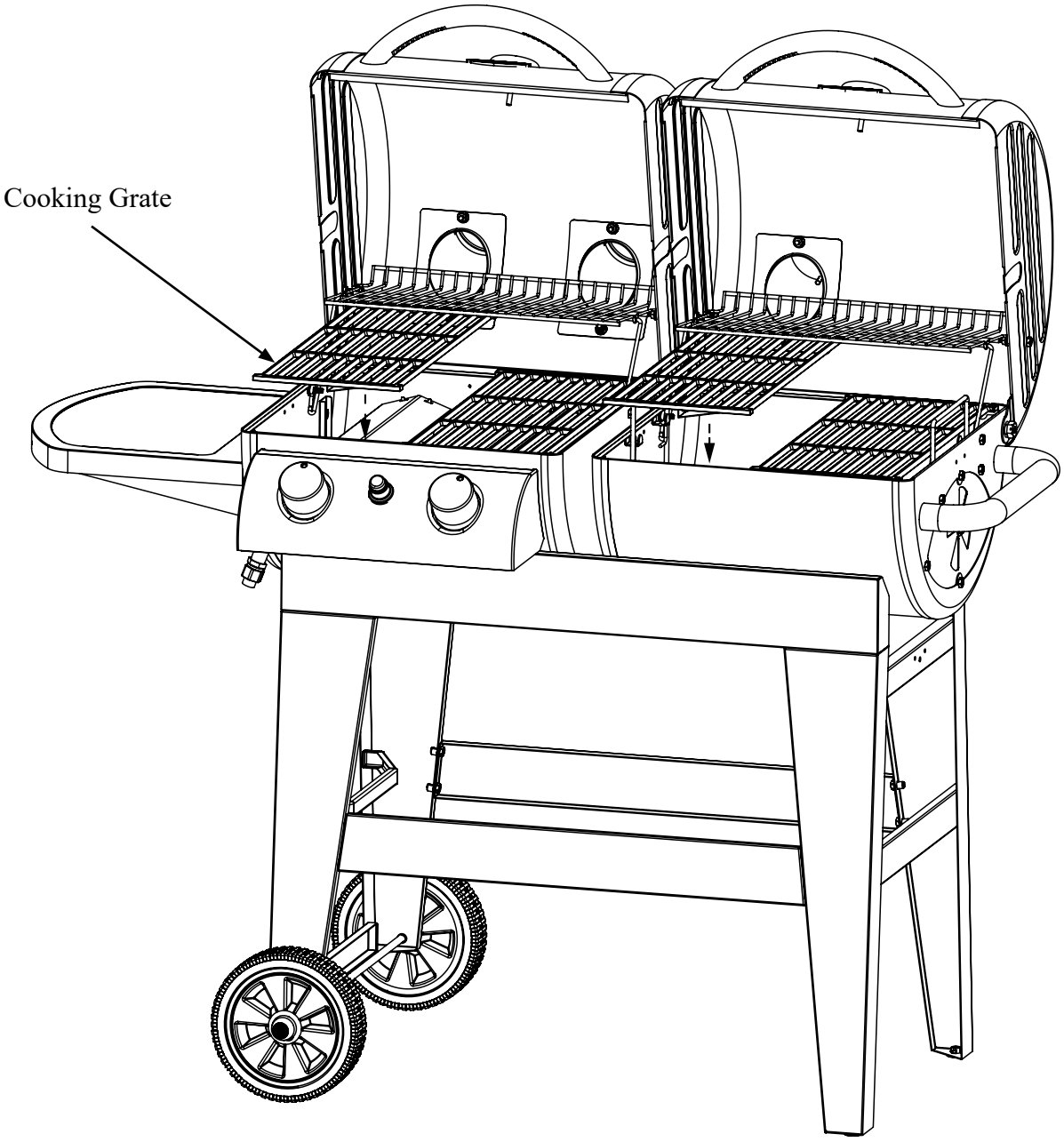

Step 18

Place UTENSIL HOOKS onto the holes on the side of the SIDE SHELF. Then slide the GREASE TRAY over the rail underneath the REMOVABLE CATCH PAN.

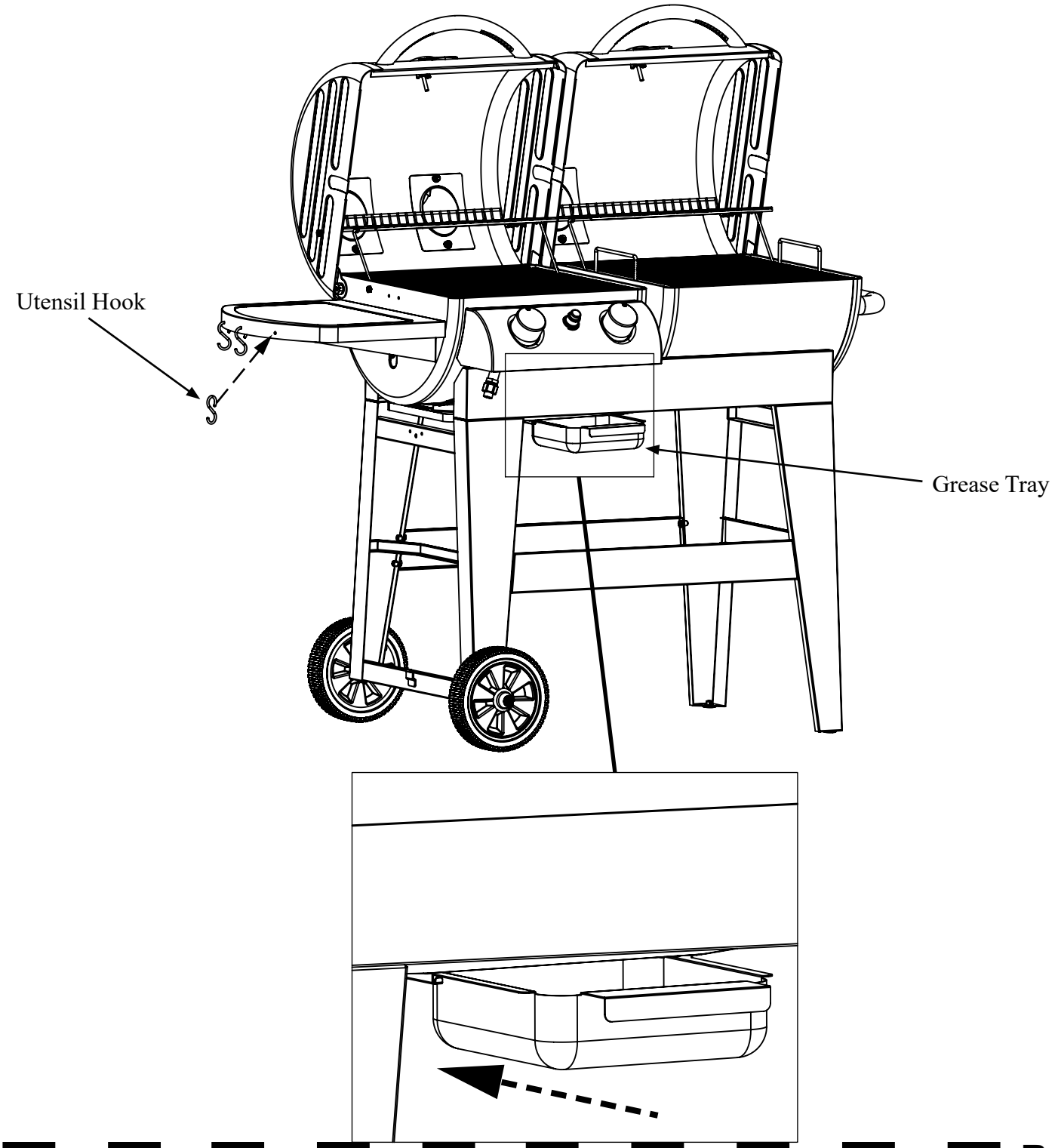

Step 19

Attach TANK SECURE BRACKET and TANK SECURE SUPPORT BRACKET to cart on the GAS GRILL BODY side. First secure the TANK SECURE SUPPORT BRACKET to cart using two (2) 1/4-20 x 1/2” HEX BOLTS and two (2) 1/4-20 HEX NUTS. Then secure the TANK SECURE BRACKET over the TANK SECURE SUPPORT BRACKET using CARRIAGE BOLT and WING NUT.

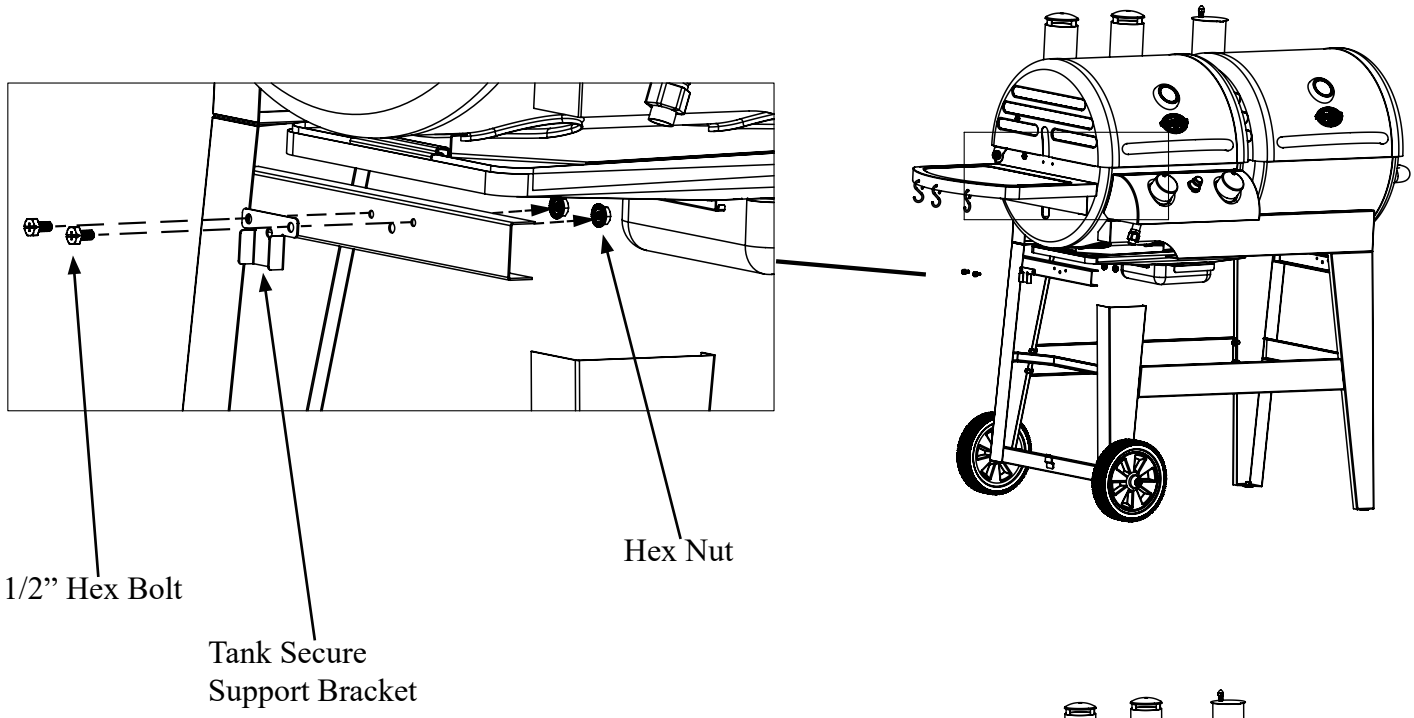

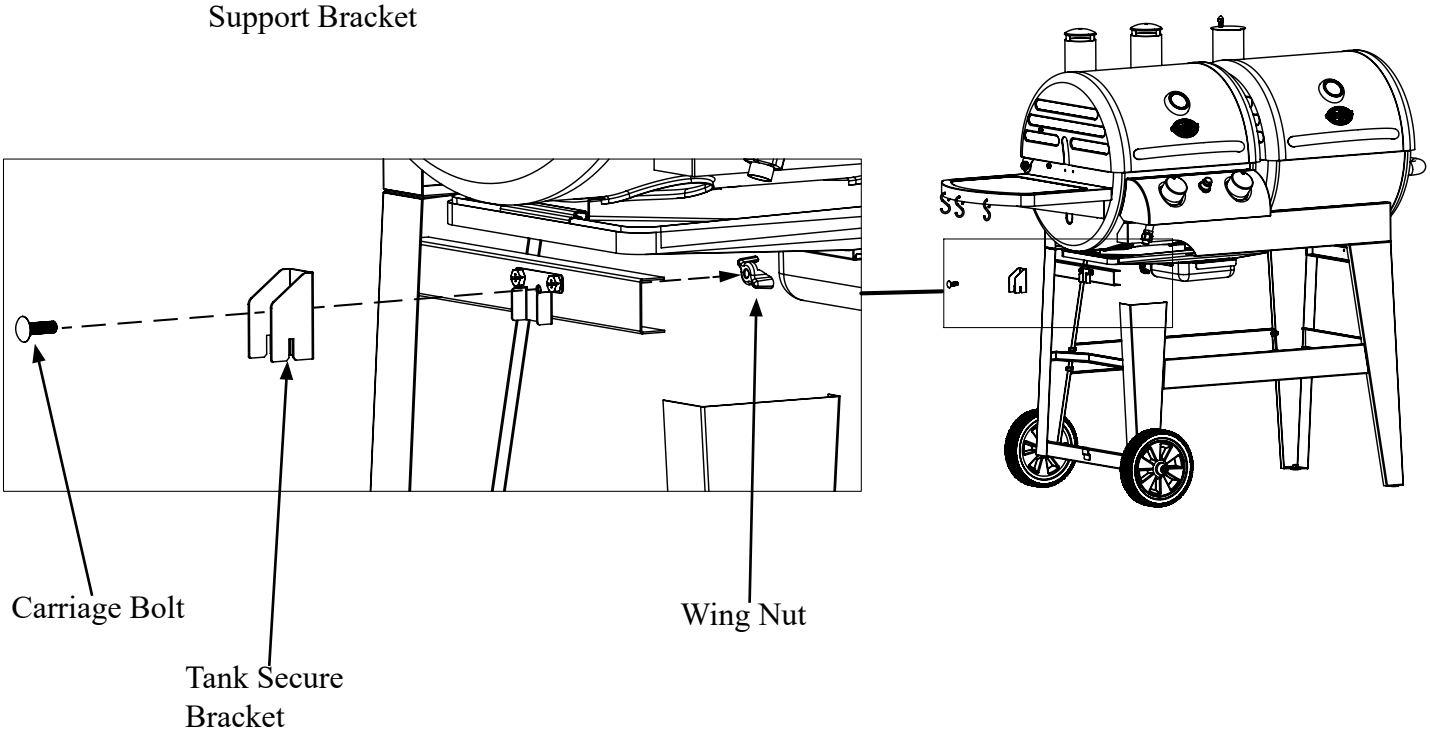

Step 20

Unscrew IGNITER PUSH BUTTON and insert one (1) “AA” battery, negative side first. Then screw back IGNITER PUSH BUTTON.

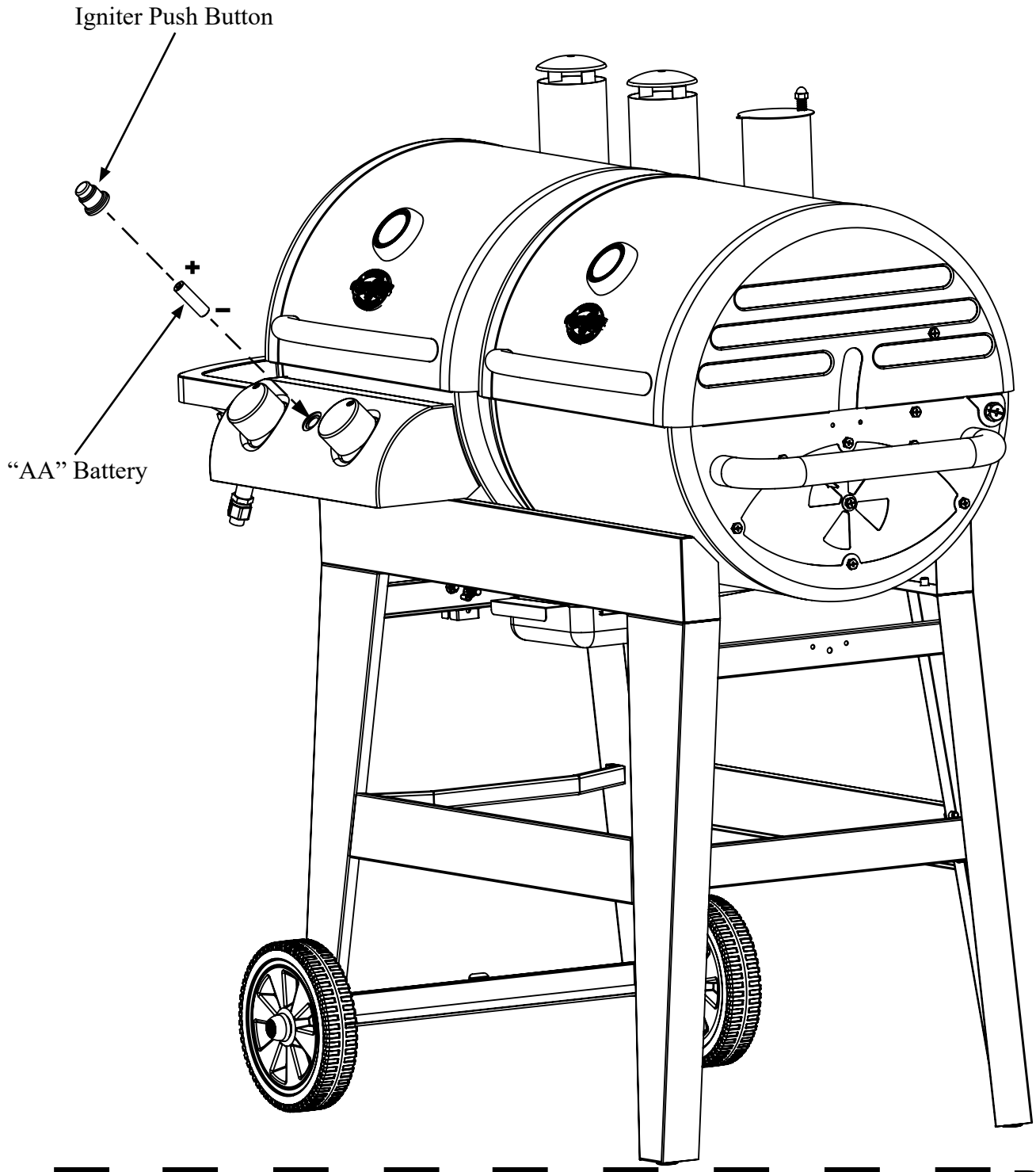

Fully Assembled

Caution: Use only the regulator provided!
If a replacement is necessary, please call our customer service department, 912- 638-4724. Do NOT use replacement parts that are not intended for this grill.

Hint: The paper label that is affixed to the hood is more easily removed when the hood is warm. Any remaining glue residue can be cleaned off with a spray lubricant like WD-40 . Do NOT use any other type of solvent or cleaner because this will damage the finish/paint/coating on the grill.

OPERATING INSTRUCTIONS

Setting Up

Set grill up on solid, flat surface with adequate wind shelter. Keep grill at least 0.5m from nearest wall. Protect LP cylinder from direct sunlight and keep away from heat sources (max. 122° F). Do not move grill while hot, and do not leave unattended during operation.

Position gas cylinder next to device such that hose is not bent, twisted, subject to tension, or touching any hot parts of appliance. DO NOT place gas cylinder directly under burners.

Regulator and Hose

These items are supplied with the appliance, but replacements are available from your equipment retailer or an authorized LP gas supplier. Use only regulators and hose approved for LP Gas at the above pressures. The life expectancy of the regulator is estimated as 10 years. It is recommended that the regulator is changed within 10 years of the date of manufacture.

The use of the wrong regulator or hose is unsafe; always check that you have the correct items before operating the appliance.

The hose used must conform to the relevant standard for the country of use. Worn or damaged hose must be replaced. Ensure that the hose is not obstructed, kinked, or in contact with any part of the barbecue other than at its connection.

Connecting the Hose to the Appliance

Before connection, ensure that there is no debris caught in the head of the gas cylinder, regulator, burner, and burner ports. Spiders and insects can nest within and clog the burner/venturi tube at the orifice. A clogged burner can lead to a fire beneath the appliance.

Clean burner holes with a heavy-duty pipe cleaner.

If the hose is replaced it must be secured to the appliance and regulator connections with hose clips. Disconnect the regulator from the cylinder (according to the directions supplied with the regulator) when the appliance is not in use.

The appliance must be used in a well ventilated area. Do not obstruct the flow of combustion air to the burner when in use. ONLY USE THIS APPLIANCE OUTDOORS.

Connecting the Gas Cylinder to the Grill

This appliance is only suitable for use with low-pressure butane or propane gas or LPG mixtures, fitted with the appropriate low-pressure regulator via a flexible hose. The hose should be secured to the regulator and the appliance with hose clips.

1. Ensure all control knobs are in the OFF position and verify that the gas cylinder valve is closed by turning the handle on the gas cylinder valve clockwise until it stops.
2. Remove the protective cap from the gas cylinder valve nozzle.
3. Hold regulator in a straight line with gas cylinder valve nozzle so the connection does not cross thread.
4. Insert regulator nipple into the gas cylinder valve nozzle opening.
5. Hand-tighten coupling nut in a clockwise direction. **Do not use tools!**
6. Perform a Leak Test. (See Leak Testing section of this manual).

** BEFORE USE CHECK FOR LEAKS **

Never check for leaks with a naked eye. Always use a soapy water solution.

NOTE: Before starting the grill, check for leaks. Make sure the regulator valve is securely fastened to the burner and the cylinder to prevent fire or explosion hazard when testing for a leak. Always perform the “Leak Test” as described below before lighting the grill or each time the cylinder is connected for use.

- Do not smoke or allow other sources of ignition in the area while conducting a leak test.
- Conduct leak test outdoors in a well-ventilated area.
- Do not use matches, lighters or a flame to check for leaks.
- Do not use grill until any and all leaks are corrected. If you are unable to stop a leak, disconnect the propane supply. Call a gas appliance serviceman or your local propane gas supplier.

Leak Test

1. Mix 2-3 fl oz. of solution, 1 part dishwashing soap, 3 parts water.
2. Ensure control valve is closed.
3. Connect regulator to cylinder and valve to burner. Ensure connections are secure before turning on gas.
4. Retest after fixing leak.
5. Turn gas off after testing.

Lighting Instructions

Always open hood while igniting grill. If grill does not light, always wait 5 minutes for gas to clear before relighting. Failure to do either may result in an explosive flare-up, which can cause serious bodily injury or death. Once lit, but before cooking on grill for first time, let grill sit for 15 minutes with hood closed. This heat cleans grill's internal parts from anything they may have come into contact with during manufacturing and shipping.

Main Burners

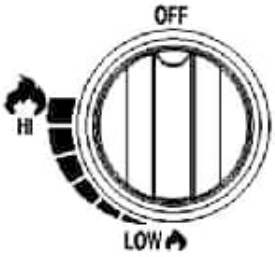

1. Make sure there are no obstructions of airflow to gas unit. Spiders and insects can nest within and clog the burner tube. A clogged burner tube can lead to a fire beneath appliance.
2. Make sure all burner knobs are in OFF position.
3. Open valve on LP gas cylinder.
4. To ignite a burner, push in and rotate knob to "HIGH," then push and hold Electronic Ignition Button until burner lights. If burner does not light in 5 seconds, turn burner OFF, wait 5 minutes for gas to clear and repeat procedure. Repeat for all desired burners. Light only burners intended for use.
5. Adjust knobs to desired cooking setting.

After lighting, observe burner flame and make sure all burner ports are lit.
If burner flame goes out during operation, immediately turn gas off on control panel and gas cylinder valve. Open hood and let gas clear for 5 minutes before relighting. **Clean grill after each use**. DO NOT use abrasive or flammable cleaners, as they damage parts and may start a fire.

Side Burner

1. Open lid during lighting. Lid must be open when burner is on.
2. Burner valves must be in OFF position.
3. Open cylinder valve.
4. Push in and rotate side burner knob slowly, about ¼ turn, until a click is heard. If burner does not light, immediately turn knob back to off and wait 5 minutes for gas to clear before repeating procedure.
5. After burner ignites, adjust knobs to desired cooking setting.

Shutting off Burners

1. Turn knob(s) counterclockwise to HIGH position, then push in and turn to OFF. Never force knob without pushing in, as this can damage valve and knob. For side burner, push in and turn to OFF.
2. Promptly close gas cylinder valve.
3. Close grill hood.

Lighting Burner with a Match

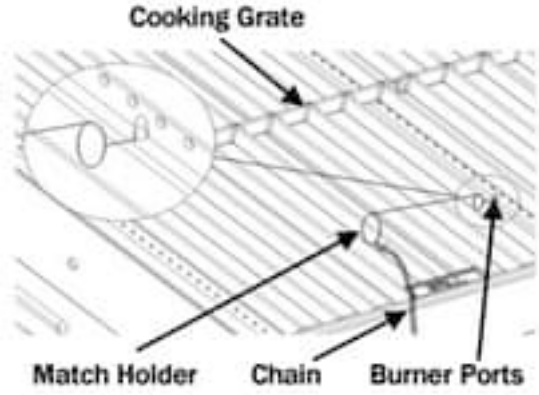

1. Push in and rotate knob to HIGH position
2. Place match in match holder installed on side of grill housing. Once lit, place flame through cooking grates near burner ports, as shown. Burner should light immediately.
3. Adjust knobs to desired cooking settings.

Observe Flame Height When Lit

View burner flame through flame viewing hole. Flame should be blue and yellow in color, and approximately 1/2-inch to 3/4-inch tall on HIGH setting.

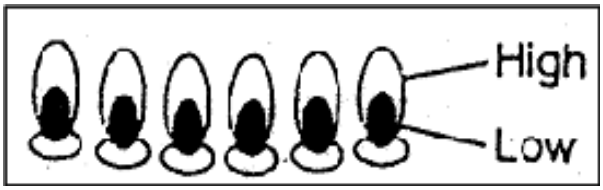

Disconnecting the Gas Cylinder

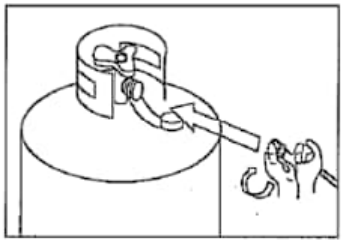

1. Turn all control knobs to the OFF position and turn the handle on the gas cylinder clockwise until it stops.
2. Turn coupling nut on regulator in a counter-clockwise direction until regulator is released from threaded gas cylinder valve nozzle.
3. Place the protective cap over gas cylinder gas nozzle.

Storage of Appliance

Storage of an appliance indoors is only permissible if the cylinder is disconnected and removed from the appliance. When the appliance is not in use, it should be covered and stored in a dry, dust-free environment.

Gas Cylinder

The gas cylinder should not be dropped or handled roughly! If the appliance is not in use, the cylinder must be disconnected. Replace the protective cap on the cylinder after disconnecting the cylinder from the appliance.

Cylinders must be stored outdoors in an upright position and out of the reach of children. The cylinder must never be stored where temperatures can reach over 121° F. Do not store the cylinder near flames, pilot lights or other sources of ignition. DO NOT SMOKE NEAR A GAS CYLINDER.

Again, this appliance is designed for use outdoors, away from any flammable materials. It is important that there are no overhead obstructions and that there is a minimum distance of 90cm from the side or rear of the appliance. It is important that the ventilation openings of the appliance are not obstructed. The barbecue must be used on a level, stable surface. The appliance should be protected from direct drafts and positioned or protected against direct penetration by any trickling water (e.g. rain).

Parts sealed by the manufacturer or its agent must not be altered by the user. No modifications should be made to any part of this appliance, and repairs and maintenance should only be carried out by a registered service engineer or technician.

Seasoning, Curing, and Preparing

IMPORTANT! BEFORE YOU USE YOUR GRILL FOR THE FIRST TIME YOU MUST SEASON AND CURE IT TO PROTECT INTERIOR AND EXTERIOR FINISHES AND PREVENT THE ADDITION OF UNNATURAL FLAVORS TO YOUR FOOD.

NOTE: Grill interiors are not painted. The interior is coated with vegetable oil. DO NOT remove this coating. It helps protect your grill from rusting.

1. Lightly coat all interior surfaces (including inside of barrel and cooking grates) with vegetable oil (spray vegetable oil is easiest but KEEP AWAY FROM HOT COALS, FIRE OR FLAME).
2. **Charcoal Grill**: Build a medium sized fire on the fire grate. Stack 2 lbs of charcoal (approximately 30 briquettes) in a pyramid and saturate with lighter fluid. DO NOT use gasoline. Light coals in several places. When charcoals ash over or turn gray, spread out from the pyramid into a flat single layer. Close charcoal grill hood. ALWAYS follow charcoal and lighter fluid manufacturers' instructions and warnings.
3. **Gas Grill:** Light burners and set on Medium-Low heat. Close gas grill hood.
4. Maintain 250° F temperature on both grills for two (2) hours. For gas grill, simply adjust knobs and monitor temperature. For charcoal grill, control heat with dual dampers and adjustable fire grate. Adjust grate one end at a time. More airflow means more heat.
5. NEVER EXCEED 450°F (230°C) AS THIS WILL DAMAGE THE FINISH AND CONTRIBUTE TO RUST.
6. You can lightly coat the exterior of the grill body (while warm) with vegetable oil. This will extend the life of the finish, much like waxing a car. Your grill is now ready for use.

PAINT IS NOT WARRANTED AND WILL REQUIRE OCCASIONAL TOUCH-UPS.
THIS UNIT IS NOT WARRANTED AGAINST RUST.

NOTE: Grill will drip oil during this process and for several uses afterwards. This is normal.

CLEANING AND CARE

CAUTION: All cleaning and maintenance should be done while grill is completely cool and with gas cylinder valve completely closed.

DO NOT clean any grill part in a self-cleaning oven. The extreme heat will damage the finish.

Recommended Cleaning Materials

- Mild dishwashing liquid detergent
- Nylon cleaning pad
- Hot water
- Wire brush

Cleaning

- Burning off the grill after every use (approximately 15 minutes) will keep excessive food residue from building up.
- DO NOT use cleaners that contain acid, mineral spirits or xylene.
- **Outside surfaces** - Use a mild dishwashing detergent and hot water solution to clean, then rinse with water.
- **Inside surface of grill hood** – If surface has appearance of peeling paint, baked on grease buildup has turned to carbon and is flaking off. Clean thoroughly with strong solution of detergent and hot water. Rinse with water and allow to completely dry. To prevent rusting, re-season after cleaning.
- **Interior of grill bottom** – Remove residue using brush, scraper and/or cleaning pad, then wash with dishwashing detergent and hot water solution. Rinse with water and let thoroughly dry.
- **Cooking Grates** – Porcelain grates have a glass-like composition that should be handled with care not to chip. Use mild dishwashing detergent or baking soda and hot water solution. Non-abrasive scouring powder can be used on stubborn stains, then rinse with water.
- **Heat Shield** – Clean residue with wire brush and wash with soapy water. Then rinse with water.
- **Grease Collector** – Periodically empty grease cup and clean with dishwashing soap and hot water solution.

An uncoated interior will rust if not properly maintained with a regular coating of cooking oil on all bare metal surfaces inside the grill. You can use either vegetable spray or liquid vegetable oil applied using a paper towel on a cooled grill.

Cleaning the Burner Assembly

1. Turn gas off at control knobs and gas tank.
2. Remove cooking grates and heat shield.
3. Remove grease collector.
4. Remove burner by unscrewing self-taping screw using Phillips-head screwdriver.
5. Lift burner up and away from gas valve orifice.
6. Clean inlet (venture) of burner with small bottle brush or compressed air.
7. Remove all food residue and dirt on outside of burner surface.
8. Clean any clogged ports with stiff wire (such as a straightened paper clip).
9. Inspect burner for any damage (cracks or holes). If damage is found, replace with new burner. To re-install burner, ensure that gas valve orifices are correctly position inside burner inlet (venture). Also check position of spark electrode.

- Ashes left in bottom of CHARCOAL GRILL for too long hold moisture and may cause rust if not cleaned out.
- GRILL is made of steel and cast iron, which WILL rust, especially without proper care.
- Do not use self-starting charcoal, as it gives off an unnatural flavor. Burn lighter fluid off completely before cooking.
- After use, coat bare metal with vegetable oil to reduce rust. Remove EXTERIOR rust with wire brush and touch up with high heat paint, available at most hardware/auto stores.
- Make sure to empty GREASE TRAY after every use once completely cooled.
- HEAT GAUGES maintain moisture, which will result in steam during cooking.
- Fill unwanted holes with extra nuts and bolts (not provided). Note: Smoke will escape from other areas than smokestacks. This will not affect cooking.
- Grill must be installed on stable, flat surface.
- It is recommended that CHARCOAL GRILL be heated up and fuel kept red hot for at least 30 minutes prior to first time cooking. Do not cook before briquettes have turned gray with ash.
- WARNING! Accessible parts may be very hot. Use outdoors only.
- WARNING! Do not use spirit or petrol when lighting or relighting.
- WARNING! Keep children and pets away from appliance.

TROUBLESHOOTING

GAS GRILL TROUBLESHOOTING		
Problem	**Possible Cause**	**Prevention/Cure**
Burner will not light using knobs.	Wires and/or electrode covered with cooking residue	Clean wire and/or electrode with rubbing alcohol
	Electrode and burners are wet	Wipe dry with cloth
	Electrode cracked or broken-sparks at crack	Replace electrode
	Wire loose or disconnected	Reconnect wire or replace electrode/wire assembly
Burner will not light with match.	No gas flow	Check if propane tank is empty. If propane tank is not empty, refer to “Sudden drop in gas flow or reduced flame height.” If empty, replace or refill.
	Coupling nut and regulator not connected	Turn the coupling nut about one-half full connected to three quarters additional turn until solid stop. Tighten by hand only. Do not use tools.

GAS GRILL TROUBLESHOOTING		
Problem	**Possible Cause**	**Prevention/Cure**
Burner will not light with match.	Obstruction of gas flow	Clean burner tubes AND Check for bent or kinked hose
	Disengagement of burner to valve	Re-engage burner and valve
	Insects in venturi (burner insert)	Clean venturi
	Burner ports clogged or blocked	Clean burner ports
Sudden drop in gas flow or reduced flame	Out of gas	Change propane tank
	Excess flow safety device may have been activated.	Turn off knobs, wait 30 sec onds and light grill. If flames are still too low. Reset the excessive flow safety device by turning off knobs and propane tank valve. Disconnect regulator. Turn burner control knobs off. Reconnect regulator and leak check connections. Turn propane tank valve on slowly, wait 30 seconds and then light the grill.
Irregular flame pattern, flame does not run the full length of burner.	Burner ports are clogged or blocked.	Clean Burner ports
Flame is yellow or orange.	New burner may have residual Manufacturing oils.	Burn Grill for 15 minutes with the lid closed
	Insect nests in venturi.	Clean venturi.
	Food residue, grease or seasoning salt on burner.	Clean burner
	Poor alignment of valve to burner venturi.	Assure burner venturi is properly engaged with valve.
Flame blows out	High or gusting winds	Turn front of grill to face wind or increase flame height. (We recommend not using grill during high winds)

GAS GRILL TROUBLESHOOTING		
Problem	**Possible Cause**	**Prevention/Cure**
	Low gas pressure	Change propane tank
		Excess flow valve tripped
Flare-Up	Grease build-up	Clean grill
	Excessive fat in meat	Tri8m fat before grilling
	Excessive cooking tempera-ture	Lower temperature accord-inglyExcessive cooking Tem-perature
Persistent grease fire	Grease trapped by food build-up around burner system.	Turn knobs to OFF. Turn gas OFF. Clean burner and tubes.
Flashback (fire in burner tube(s))	Burner and/or burner tubes dirty.	Turn knobs to OFF. Turn gas OFF. Clean burner and tubes.
Inside of lid appears to be peeling - like paint peeling	Baked on grease buildup has turned to carbon and is flaking off.	Clean inside of lid thoroughly. The lid is not painted on the inside. Re-coat with vegeta-ble oil per earlier directions.

This Page Intentionally Left Blank

GRILLING RECIPES

Know Your Cuts of Meat

BEEF CUTS

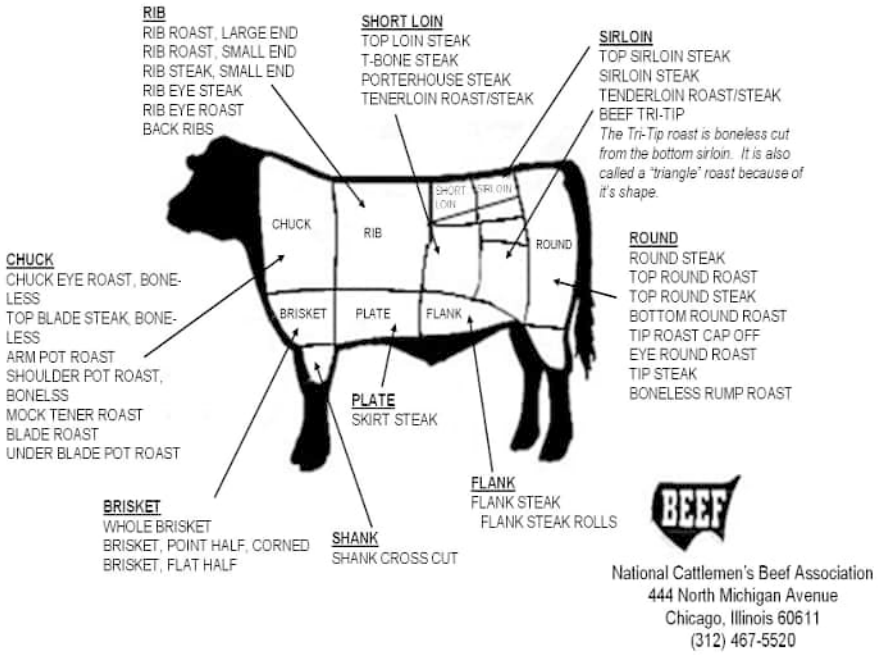

PORK CUTS

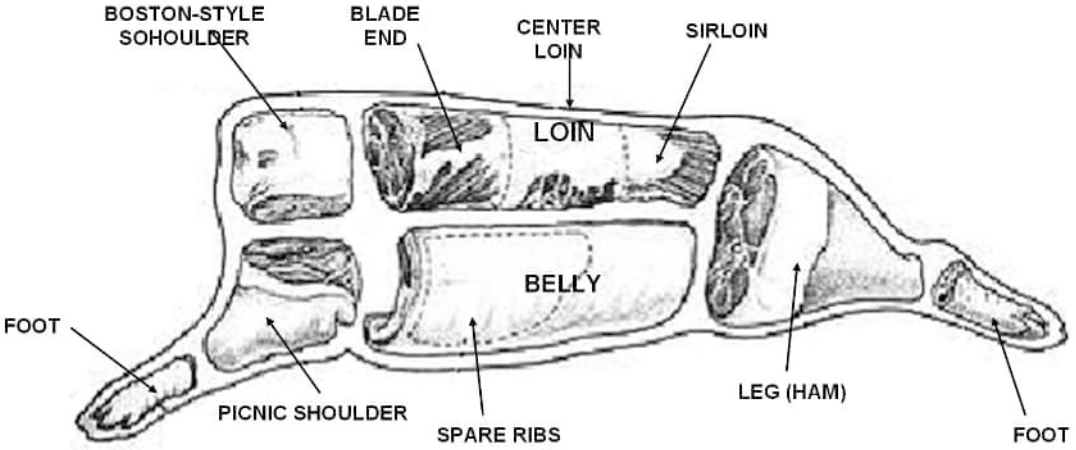

Direct Heat

- **Direct Heat is a high heat method used to cook foods that take less than 25 minutes to cook. Typically, this means foods that are relatively small or thin such as steaks, chops, boneless chicken breasts, fish fillets, hamburgers, etc.**
- **Cooking with a MEAT THERMOMETER ensures food is fully cooked. Insert into the thickest part not touching bone, and allow five minutes to register.**
- **Internal temperatures for FOWL should be 170˚F to 180˚F.**
- **Internal temperature for meat should be 140˚F for rare, 160˚F medium, and 170˚F for well done.**

STEAK (& ALL MEATS):

- Cook food on the charcoal side of the unit, directly above coals/heat.
- To grill meats, raise fire grate to high position (hot) and sear for one minute on each side with the lid open to seal in flavor and juices. Then lower fire grate to medium position with lid closed and cook to desired doneness.
- Control heat with dual dampers and adjustable fire grate.

Tip: Place grilled meat back in the marinade for several minutes before serving – it will become tastier and juicier.
CAUTION: Boil extra marinade first to kill bacteria remaining from the raw meat.

MARINATED FLANK STEAK:

- Mix marinade ingredients in nonmetal dish.
- Let steak stand in marinade for no less than 4 hours in refrigerator.
- Brown each side for 5 minutes, but center should remain rare.
- Cut steak diagonally across the grain into thin slices before serving.
- Grill with fire grate in high (hot) position with lid open or closed.

Meat Marinade

1/2 cup vegetable or olive oil
1/3 cup soy sauce
1/4 cup red wine vinegar
2 tbsp lemon juice
1 tsp dry mustard
1 minced clove garlic
1 small minced onion
1/4 tsp pepper

QUAIL OR DOVES:

- Cover birds in Italian dressing (Good Seasons or Kraft Zesty) and marinate overnight.
- Pour remaining dressing and cover with Texas Pete Hot Sauce for 6 hours.
- Wrap birds in thick bacon secured by a toothpick.
- Place on grill. Keep turning until bacon is black.

- Grill for 20 minutes. Sear with lid open and fire grate in high (hot) position for 1 minute on each side before lowering grate and closing lid.
- To SMOKE, place birds in center of GRID with fire in both ends of FIRE BOX.

KABOBS:

- Alternating on skewers any combination of meat, onions, tomatoes, green peppers, mushrooms, zucchini, circular slice of corn-on-the-cob, or pineapple. Meat could consist of chunks of shrimp, scallops, lobster, chicken, sausage, pork, beef, etc.
- Marinate the meat in refrigerator for several hours.
- Grill each side approximately 7 minutes turning occasionally while basting with marinade. Leave a small amount of room between pieces in order to cook faster.
- Grill with lid up and the fire grate in the lowest position. See marinade recipe on last page.

Kabob Marinade:

1 cup soy sauce
½ cup brown sugar
½ cup vinegar
½ cup pineapple juice
2 tsp salt
½ tsp garlic powder

- Mix all ingredients in a saucepan and bring to boil.
- Allow marinade to cool before marinating your meat in it.
- Marinate beef in mixture a minimum of 4 hours.

HOT DOGS:

- Grill with lid up and fire grate in high (hot) position for approximately 6 minutes.
- Turn every few minutes.

HAMBURGERS:

See Meat Marinade on prior pages.
You may also marinate by allowing to stand in marinade for 1 or 2 hours at room temperature before cooking, or let stand in covered dish in refrigerator up to 24 hours.

- Bring to room temperature before cooking.
- Mix in chopped onions, green peppers, salt, sear 3/4 inch patties on each side with fire grate in high position for a few minutes.
- Lower fire grate to medium position and grill with lid down to avoid flare-ups.
- Cook each side 3 to 7 minutes according to desired doneness.
- Cook ground meat to 150 internally or until juice runs clear (free of blood) for prevention of E-coli.
- Burgers can be basted with marinade when turning and/or other ingredients can be mixed in with the ground beef such as chili sauce or powder.

SHRIMP (Peeled) & CRAYFISH:

- Place on skewers.
- Coat with melted butter and garlic salt.
- Grill 4 minutes on each side or until pink. Cocktail sauce optional.

BAKED POTATOES:

- Rub with butter and wrap in foil and cook on grill with lid down for 50 minutes.
- Turn after 25 minutes (no need to turn if smoked).
- Squeeze to check for doneness.

SWEET CORN IN HUSKS:

- Trim excess silk from end and soak in cold salted water 1 hour before grilling.
- Grill 25 minutes – turning several times.

SMOKING RECIPES

Indirect Heat

SMOKING TIMES

Food	Weight	Water Pan Smokin'	Side Fire Box	Temperature on Meat Thermometer
Beef Roasts, Beef Brisket	3 – 4 lbs.	1 – 1 1/2 hours	4 – 5 hours	140° rare
Lamb Roasts, Venison	5 – 7 lbs.	1 3/4 – 2 1/2 hours	5 – 6 hours	160° medium
Large cuts of Game	7 – 9 lbs.	2 1/2 – 3 1/2 hours	7 – 10 hours	170° well done
Pork Roasts	3 – 4 lbs.	1 3/4 – 2 1/2 hours	5 – 6 hours	170°
	5 – 8 lbs.	2 1/2 – 3 hours	7 – 8 hours	170°
Pork/ Beef Ribs	Full grill	1 1/2 – 2 hours	4 – 6 hours	Meat pulls from bone
Pork Chops	Full grill	3/4 – 1 1/4 hour	4 – 6 hours	Meat pulls from bone
Sausage Links	Full grill	2 – 2 3/4 hours	4 – 5 hours	170° for fresh sausage
Ham, Fresh	10 lbs.	3 – 4 hours	7 – 8 hours	170°
Ham, Cooked	All sizes	1 1/2 – 2 hours	3 – 4 hours	130°
Chicken (Cut up or split)	1-4 fryers, cut up or split	1 – 1 1/4 hours	4 – 5 hours	180° / leg moves easily in joint
Chicken (Whole)	1-4 fryers	1 1/4 – 1 1/2 hour	5 – 6 hours	180° / leg moves easily in joint
Turkey (Unstuffed)	8 – 12 lbs.	1 3/4 – 2 1/2 hours	7 – 8 hours	180° / leg moves easily in joint
Fish, small whole	Full grill	1/2 – 3/4 hours	2 – 3 hours	Flakes with fork
Fish, filets, steak	Full grill	1/4 – 1/2 hours	1 – 3 hours	Flakes with fork
Duck	3 – 5 lbs.	1 – 1 3/4 hours	5 – 6 hours	180° / leg moves easily in joint
Small game birds	Full grill	3/4 – 1 hour	4 – 5 hours	180° / leg moves easily in joint

Pan not included. Disposable bread pan is recommended. SMOKE BY COOKING SLOWLY (See chart above).

1. Place water/drip pan on left side of fire grate.
2. Place hot coals on right side (damper end) of fire grate. The charcoal basket accessory helps confine coals to one side.
3. Place meat above water pan.
4. Place fire grate in low position.
5. Close lid & control heat with dampers & adjustable grate.

- You may want to sear certain foods before smoking by placing meat directly above coals with LID open and FIRE GRATE in high (hot) position for several minutes. Add flavor soaked wood chips to the fire and add 1 part marinade, beer, or wine to 3 parts water to the drip pan.
- OPENING THE SMOKING CHAMBER WILL EXTEND COOKING TIME. Cooking with meat thermometer ensures food is fully cooked. Insert thermometer into thickest part not touching bone, and allow five minutes to register. Internal temperature for birds should be 170°F to 180°F or when leg moves easily in joint. Meat should be cooked to internal temperature of 140°F for rate, 160°F for medium and 170°F for well done. Check the water level when cooking more than 4 hours or when you can't hear the water simmering. Add water by moving meat over and pouring water through GRILL into WATER PAN.
- IF THE SMOKE IS WHITE, THE FIRE'S RIGHT. IF THE SMOKE IS BLACK, ADD SOME DRAFT.

SMOKED TURKEY:

- Empty cavity rinse and pat dry with paper towel.
- Tuck wing tips under the back and tie legs together.
- Place in center of cooking grid directly above foil drip pan of water.
- Smoke for 12 minutes per pound. Allow several extra minutes per pound if stuffed to allow for expansion.
- Use a meat thermometer for best results (190F internal).

SMOKED BAKED HAM:
You can smoke fully cooked canned ham or smoked and cured whole ham or shank or butt portion.

Glaze

1 cup of light brown sugar, firmly packed
1/2 cup orange juice
1/2 cup honey

- Combine sugar, juice and honey. Let glaze sit for at least 4 hours.
- Place fire grate in the lowest position and a drip pan under the meat.
- Remove rind and score fat diagonally to give a diamond effect.
- Insert a whole clove into the center of every diamond.
- Place ham with fat side up in center of cooking grid directly above drip pan. Close lid.
- About 9 minutes per pound is suggested for fully cooked hams. Smoked or cured ham, which is not fully cooked, should be cooked to an internal temperature of 160°F.

- Baste with ham glaze 3 or 4 times during last 30 minutes of cooking time.
- Garnish with pineapple rings about 15 minutes before end of cooking time.

SMOKED HOT DOGS STUFFED:

- Slit hot dogs lengthwise, within 1/4 inch of each end.
- Stuff hot dogs with cheese and relish and wrap in bacon.
- Place on cooking grid over drip pan and smoke 15-20 minutes or until bacon is crisp.

SMOKED CHICKEN PARTS AND HALVES:

- Rinse pieces in cold water and pat dry with paper towels.
- Brush each piece with vegetable oil and season to taste with salt and pepper.
- Brown pieces directly above coals with lid open and grate in high or medium position for several minutes.
- Then place pieces on cooking grate directly above drip pan.
- With the grate in the low position, cook with lid down for 55 to 60 minutes or until done. Do not use vegetable oil or salt and pepper if using marinade.

SMOKED VENISON:

Venison Marinade:

1 cup Balsamic or wine vinegar
1 cup olive oil
2 oz. Worcestershire
1/2 oz. Tabasco
2 tbsp. Season All
1-2 chopped jalapenos
3 oz. soy sauce

Bacon Marinade

2 oz. wine vinegar
2 oz. Worcestershire
4 dashes Tabasco

- Place leg of venison in a container or “hefty bag” and marinate for 2-4 days, turning daily. Marinate bacon overnight in its marinade.
- Remove roast from refrigerator at least an hour before cooking.
- Season generously with seasoned salt and coarse ground black pepper.
- Wrap 1 lb. Bacon over the top of the roast, and smoke 20/25 minutes per pound, or until tender. Do not overcook.

SMOKED SHRIMP & CRAYFISH:

- Mix in a foil pan 1/2 cup butter, two cloves of crushed garlic, Tabasco, sliced green pepper, 1 tablespoon each of minced onions, salt and juices from one lemon.

- Add shrimp and/ or crayfish and smoke 45 minutes.

SMOKED VEGETABLES:

- Turnips, potatoes, carrots, okra, mushrooms, peeled onions, zucchini, squash, etc.
- Put in pan and cover with water and cook for several hours while cooking the meat. Or place vegetables on grill and smoke for 50 minutes, either wrapped in foil or not.

SMOKED FISH:

- Marinate in brine (1/4 cup dissolved in 1 qt of water) or marinate fish in 1 cup white wine, 1 cup soy sauce mixed with 1 cup lemon juice.
- Marinate overnight in covered dish in refrigerator.
- Let air on rack 20 minutes before placing on Pam-sprayed grill.
- Smoke 25 minutes.

SMOKED SPARE/BACK RIBS:

- Peel off tough layer of skin on back side.
- Rub all surfaces with seasoning.
- Place ribs in center of grid above drip pan and smoke approximately 1 1/2 hours or until meat pulls away from bone.
- Baste with barbecue sauce during last 30 minutes.

CHICKEN MARINADE:

Combine

1/2 cup soy sauce
1/4 cup vegetable oil
1/4 cup red wine vinegar
1 teaspoon oregano
1/2 teaspoon sweet basil
1/2 teaspoon garlic powder with parsley
1/4 teaspoon pepper

- Pour over chicken pieces in non-metal dish
- Cover and refrigerate overnight, turning occasionally. Use marinade to baste chicken while cooking.

MEAT MARINADE: (For steaks, chops, and burgers)

Combine

¼ cup soy sauce
2 coarsely chopped large onions
2 cloves garlic (halved)

- Combine ingredients in an electric blender, cover, and process at high speed 1 minute or until

mixture is very smooth.
- Stir in 1/4 cup bottle gravy coloring (Kitchen Bouquet and Gravy Master) and 2 teaspoons Beau Monde seasoning (or substitute 1 teaspoon MSG and 1 teaspoon seasoned salt).
- Allow meat to stand in marinade at room temperature for 2 hours or refrigerate up to 24 hours in a covered dish.
- Bring meat to room temperature before cooking.

SHISH KABOB MARINADE:

Mix

1 cup soy sauce
1/2 cup brown sugar
1/2 cup vinegar
1/2 cup pineapple juice
2 teaspoons salt
1/2 teaspoon garlic powder

- Mix ingredients and bring to a boil.
- Marinate beef in mixture a minimum of 4 hours.

ACCESSORIES

Cover Custom Fit
Weather Resistant
Protects Grill Finish
Cover Accommodates Side
Shelf or Side Fire Box

Warming Rack
Increase Grill Area
Keeps Food Warm

Side Fire Box
Turn your charcoal grill into an authentic Texas-Style Offset Smoker in minutes!

Rotisserie
Excellent for Effortless Grilling
Universal Fit for Any Grill

Charcoal Basket
Confines Coals to One Side for Smoking
Indirect Cooking

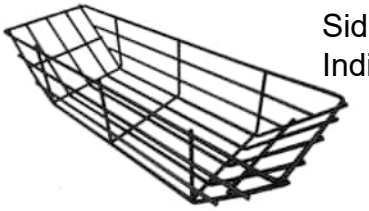

Tank Cover
Weather Resistant
Nylon Velcro
Elastic at Top and Bottom
Cover Only
Tank Not Included

Apron
Machine Washable
Two Front Pockets
Adjustable Straps

Porcelain-Coated Cast Iron Grate
East Clean-Up
Non-Stick
Non-Warp

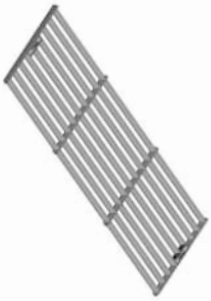

For pricing or to order accessories visit:

www.CharGriller.com

Char Griller®
Premier Specialty Brands, LLC,
5367 New Peachtree Road, Suite 150,
Chamblee, GA 30341
www.chargriller.com/pages/customer-support