OWNER'S MANUAL

King-Griller™
BY CHAR-GRILLER®

SMOKIN' ACE™

Model #E3018

Keep your receipt with this manual for Warranty.

TABLE OF CONTENTS

Safety Warnings & Warranty.....A-1
Assembly Instructions B-1
Product Usage C-1
Recipes D-1
Accessories E-1

IMPORTANT SAFETY WARNINGS

READ ALL SAFETY WARNINGS AND INSTRUCTIONS CAREFULLY BEFORE ASSEMBLING AND OPERATING YOUR GRILL

Read the following instructions carefully and be sure your grill is properly assembled, installed, and maintained. Failure to follow these instructions may result in serious bodily injury and/or property damage.

- Grill is for use outdoors and in well-ventilated areas, only.
- Use caution when assembling and operating your grill to avoid scrapes or cuts from sharp edges.
- Do not use lighter fluid, gasoline, kerosene, alcohol or other accelerant for lighting charcoal due to flammability, risk of bodily injury and potential to leave a distasteful flavor in your food.
- Do not leave a lit grill unattended. Keep children and pets away from grill at all times.
- Do not use grill in high winds.
- Use caution when moving grill to prevent strains.
- The use of alcohol, prescription or non-prescription drugs may impair the operator's ability to properly assemble or safely operate the grill.
- Use grill at least 12 ft. from any wall or surface. Maintain 12 ft. clearance to objects that can catch fire or sources of ignition such as pilot lights on water heaters, live electrical appliances, etc.
- When adding charcoal and/or wood, use extreme caution.
- Never move grill when it is in use or when it contains hot coals or ashes.
- Do not use grill for indoor cooking or heating. TOXIC fumes can accumulate and cause asphyxiation.
- Do not use in or on boats or recreational vehicles.
- Make sure to empty grease can after every use once completely cooled.
- Do not place grill near flammable liquids, gases, or where flammable vapors may be present.
- When cooking with oil/grease, do not allow the oil/grease to exceed 350°F (177°C). Do not store or use extra cooking oil in the vicinity of this or any other grill.
- Use caution since flames can flare-up when fresh air suddenly comes in contact with fire.

WARNING: FUELS USED IN WOOD OR CHARCOAL BURNING APPLIANCES, AND THE PRODUCTS OF COMBUSTION OF SUCH FUELS, CAN EXPOSE YOU TO CHEMICALS INCLUDING CARBON BLACK, WHICH IS KNOWN TO THE STATE OF CALIFORNIA TO CAUSE CANCER, AND CARBON MONOXIDE, WHICH IS KNOWN TO THE STATE OF CALIFORNIA TO CAUSE BIRTH DEFECTS OR OTHER REPRODUCTIVE HARM. *For more information go to: www.P65Warnings.ca.gov.*

ADVERTENCIA: LOS COMBUSTIBLES USADOS EN EQUIPOS PARA QUEMAR MADERA O CARBÓN, ASÍ COMO LOS PRODUCTOS DE TAL COMBUSTIÓN, PUEDEN EXPONERTE A SUSTANCIAS QUÍMICAS, ENTRE ELLAS EL NEGRO DE HUMO Y EL MONÓXIDO DE CARBONO, QUE EL ESTADO DE CALIFORNIA RECONOCE COMO CAUSA, RESPECTIVAMENTE, DE CÁNCER Y DE MALFORMACIONES CONGÉNITAS Y OTROS DAÑOS AL SISTEMA REPRODUCTOR. *Para más información, visite www.P65Warnings.ca.gov*

IMPORTANT SAFETY WARNINGS
(Continued)

- Do not lean over an open grill and be mindful of hands/fingers near the edge of the cooking area.
- When opening the lid, keep hands, face, and body safe from hot steam and flame flare-ups.
- WARNING: To avoid injuries, gloves or other protective articles should be used when operating the grill.
- Do not exceed a temperature of 500°F.
- Do not allow charcoal and/ or wood to rest on the walls of grill. Doing so will greatly reduce the life of the grill.
- Always wear grill gloves to protect hands from burns. Avoid touching hot surfaces.
- CAUTION: Exposed metal dampers on air vents and/or metal handles are hot during usage. Again, always wear grill gloves when adjusting air flow to protect hands from burns.
- Do not alter this grill in any manner.
- When opening lid, make sure it is pushed all the way back so it rests against the lid support brackets. Use extreme caution as hood could fall back to a closed position and cause bodily injury.
- Close lid and all dampers to help suffocate flame.
- Always hold an open lid from the handle to prevent it from closing unexpectedly.
- Never leave coals and ashes unattended. Before grill can be left unattended, coals and ashes must be removed. Use caution to protect yourself and property.
- Carefully place remaining coals and ashes in a noncombustible metal container and saturate completely with water. Allow coals and water to remain in a metal container for 24 hours prior to disposing.
- To protect against bacteria that could cause illness, keep all meats refrigerated and thaw in refrigerator or microwave. Keep raw meats separate from other foods, and wash everything that comes in contact with raw meat.
- Cook meat thoroughly, and refrigerate leftovers immediately.
- Use a calibrated food thermometer and the USDA guidelines to ensure that meat, poultry, seafood, and other cooked foods reach a safe minimum internal temperature.
- Always have a fire extinguisher near at all times. Maintain and check your fire extinguisher regularly.

THESE WARNINGS ALSO APPLY TO THE SIDE FIRE BOX.

*** STOP! CALL Char-Griller FIRST! ***

Do NOT Return Product to Store.

This grill has been made according to the highest of quality standards. If you have any questions not addressed in this manual or if you need parts please email our Customer Service Department at: www.chargriller.com/pages/customer-support and have your serial number handy.

REGISTER YOUR GRILL:

To take full advantage of the Char-Griller® warranty be sure to register your grill by visiting **www.chargriller.com/pages/customer-support**

Registration provides important protections:

1. Register your grill today to activate your warranty and get exclusive access to product developments, updates, and recipes.
2. This allows us to help you get warrantied parts to you quickly and provide enhanced customer service.

NOTE: You will need your model #, serial number, and a copy of the original sales receipt when registering.

Document Your Serial Number HERE:

(Serial number is located on the back of the grill body or on the leg.)

_____

(SERIAL #)

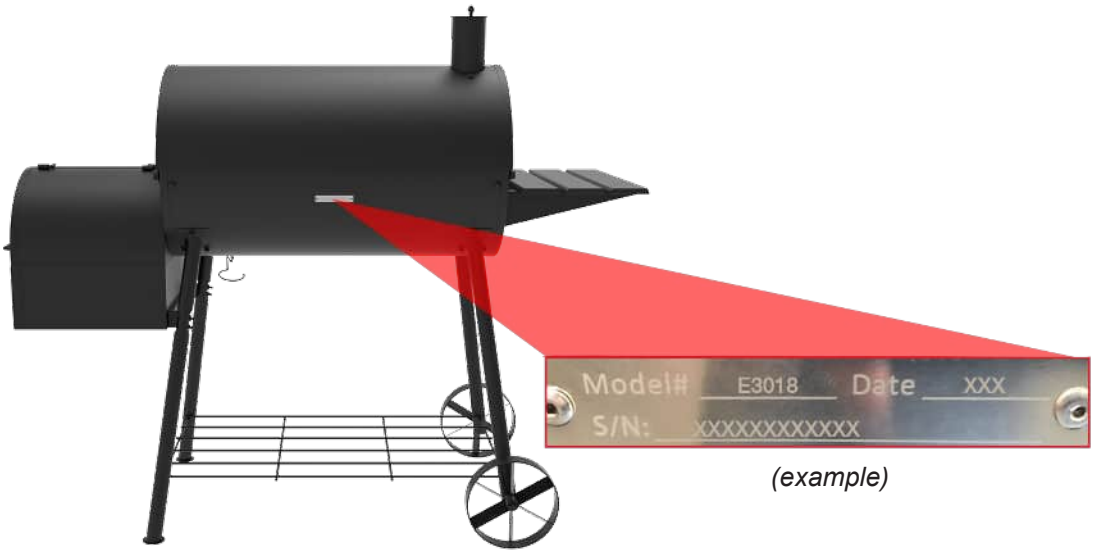

(example)

WARRANTY INFORMATION

A COPY OF THE DATED PROOF OF PURCHASE (RECEIPT) IS REQUIRED WHEN REGISTERING OR SUBMITTING A WARRANTY* CLAIM. PLEASE RETAIN A COPY OF THE RECEIPT FOR YOUR RECORDS.

Char-Griller® will replace any defective part of its grillers/smokers, under warranty, as outlined below.

PLEASE READ THIS INFORMATION IN DETAIL AND IF YOU HAVE ANY QUESTIONS CONTACT CUSTOMER SERVICE AT www.chargriller.com/pages/customer-support.

Charcoal Grills	
Grill - Hood AND Bottom (excludes removable Ash Pan)	6 months from date of purchase for rust through / burn through
Ash Pan AND Defective Parts	6 months from date of purchase

SURFACE RUST IS NOT CONSIDERED A MANUFACTURING OR MATERIALS DEFECT

Char-Griller® grills are made of steel and if exposed to the elements rust will occur naturally. Please refer to the section entitled, “Usage” to review how to care for your grill properly.

Surface issues such as scratches, dents, corrosion or discoloring by heat, abrasive and chemical clearers, surface rust or the discoloration of steel surfaces are NOT covered under these warranties.

Warranties are for the replacement of defective parts only. Char-Griller® is not responsible for damage resulting from accident, alteration, misuse, abuse, hostile environments, improper installation, and installation not in accordance with local codes of service of unit.

Excluded Under ALL Warranties
Paint; Surface Rust; Heat Damage; Incorrect Parts ordered by customer, including shipping; Worn Parts; Missing or damaged parts not reported within two (2) months of purchase date; Defective parts not reported within six (6) months of purchase date; Fading grill cover.

*NOTE: For warranty claims, photos and prepaid return of the item in question may be required. Misuse, abuse or commercial use nullifies all warranties.

ASSEMBLY INSTRUCTIONS

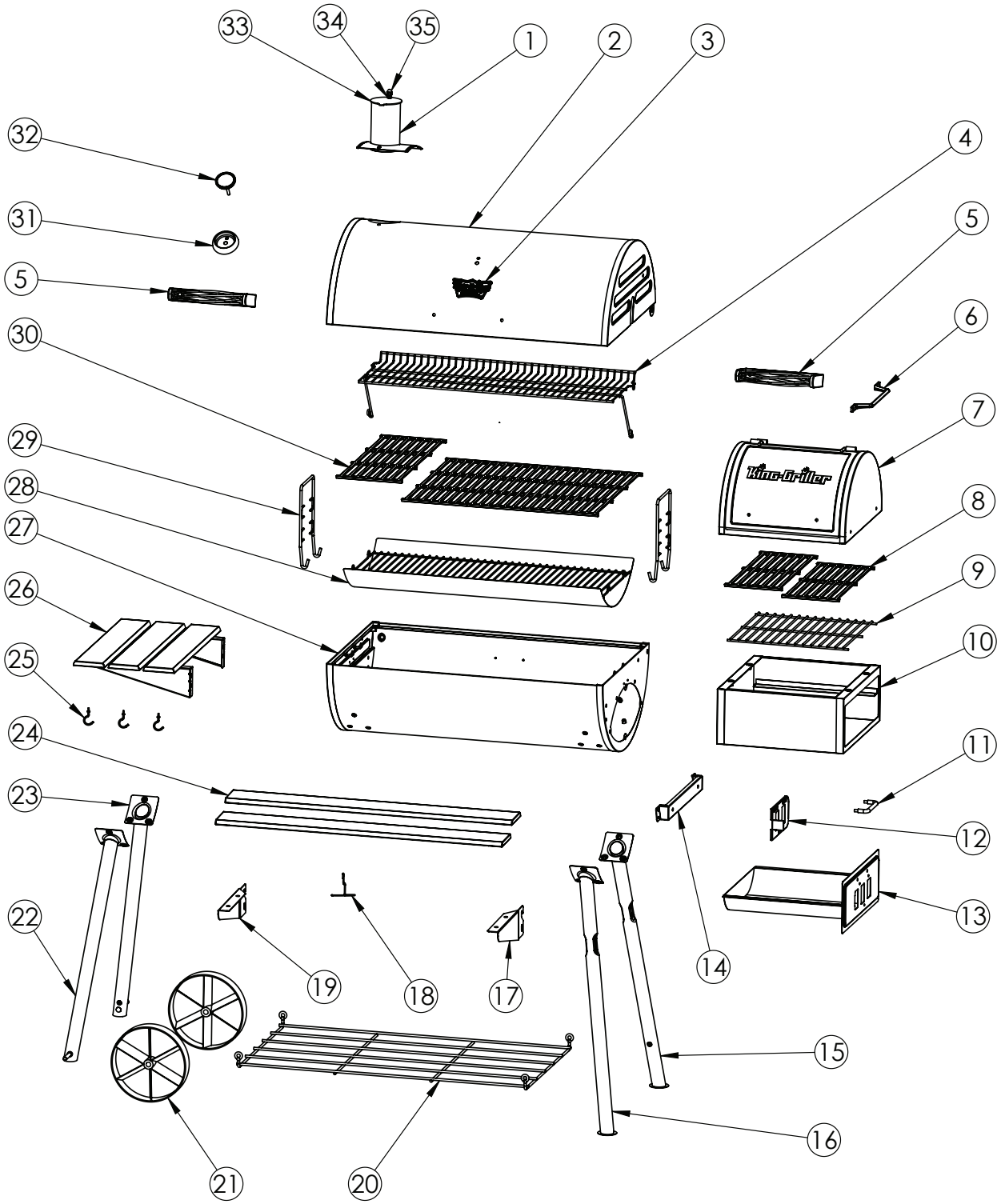

Sold under license from W.C. Bradley Co.

PARTS LIST

Item	QTY	Part Name
1	1	SMOKESTACK
2	1	GRILL HOOD
3	1	LOGO PLATE
4	1	WARMING RACK
5	2	HOOD HANDLE
6	1	SIDE HANDLE
7	1	SIDE FIRE BOX TOP HALF
8	2	SIDE FIRE BOX COOKING GRATE
9	1	SIDE FIRE BOX CHARCOAL GRATE
10	1	SIDE FIRE BOX BOTTOM HALF
11	1	DRAWER HANDLE
12	1	DRAWER DAMPER
13	1	DRAWER
14	1	SIDE FIRE BOX SUPPORT BRACKET
15	1	REAR LONG LEG
16	1	FRONT LONG LEG
17	1	FRONT SHELF RIGHT SUPPORT BRACKET
18	1	GREASE CUP CLIP
19	1	FRONT SHELF LEFT SUPPORT BRACKET
20	1	BOTTOM SHELF
21	2	METAL WHEEL
22	1	FRONT SHORT LEG
23	1	REAR SHORT LEG
24	2	FRONT SHELF SLAB
25	3	UTENSIL HOOK
26	1	METAL SIDE SHELF
27	1	GRILL BODY
28	1	ASHPAN
29	2	ASHPAN HANGER
30	4	COOKING GRATE
31	1	THERMOMETER BEZEL
32	1	THERMOMETER
33	1	SMOKESTACK DAMPER
34	1	SMOKESTACK SPRING
35	1	ACORN NUT

HARDWARE AND TOOLS NEEDED

Assembly: Get another person to help. Tools Needed: Hammer, Pliers, and a 7/16” Nut Driver.

NOTE: Do Not tighten any bolts unless instructed to do so. Tightening too soon may prohibit parts from fitting together. All Hex Nuts should be on the inside of the grill unless stated otherwise. Unpack all contents in a well cleared and padded area.

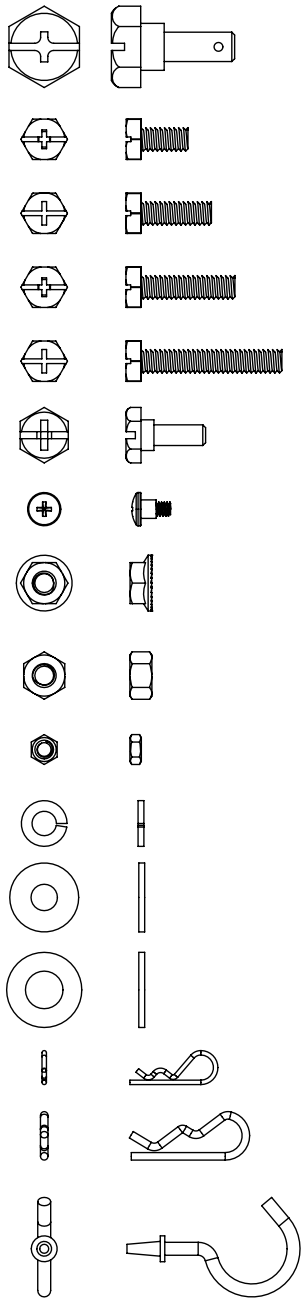

SHOULDER BOLT, 5/16-18……...2 PCS

HEX BOLT 1/4-20 X 1/2”……..36 PCS

HEX BOLT 1/4-20 X 3/4”……...4 PCS

HEX BOLT 1/4-20 X 1”….....2 PCS

HEX BOLT 1/4-20 X 1 1/2”……6 PCS

SHOULDER BOLT, 1/4-20…….4 PCS

SHOULDER BOLT, #8-36……..4 PCS

HEX NUT, FLANGE, 1/4-20…….....32 PCS

HEX NUT, 1/4-20…….....2 PCS

HEX NUT, #8-36…….....4 PCS

WASHER, LOCK, 1/4”…….....20 PCS

WASHER, FLAT, 1/4”…….4 PCS

WASHER, FLAT, 2/5”…….4 PCS

PIN, HAIR COTTER, 1”.....2 PCS

PIN, HAIR COTTER, 1.5”.....2 PCS

UTENSIL HOOK..... 3 PCS

Step 1

Lay the Grill Body upside down on the floor, and attach the legs labeled (LR and RR) to the Grill Body using three Lock Washers and three ½" Hex Bolts on each leg. NOTE: Leg with the Axle goes opposite the Side Fire Box cut out hole on the Grill Body.

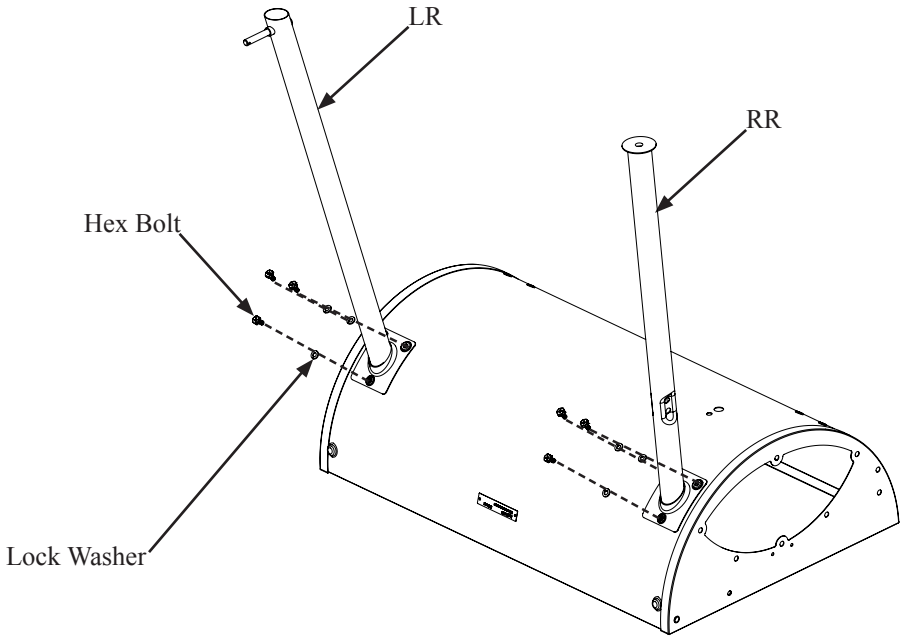

Step 2

Attach the Bottom Shelf and Front Legs to the Grill Body. First insert the hook on the Bottom Shelf into the hole on the Rear Legs labeled (LR and RR) then insert Bottom Shelf hook into the hole on the Front Legs labeled (LF and RF) and secure the legs to the Grill Body using three Lock Washers and three ½" Hex Bolts per leg.

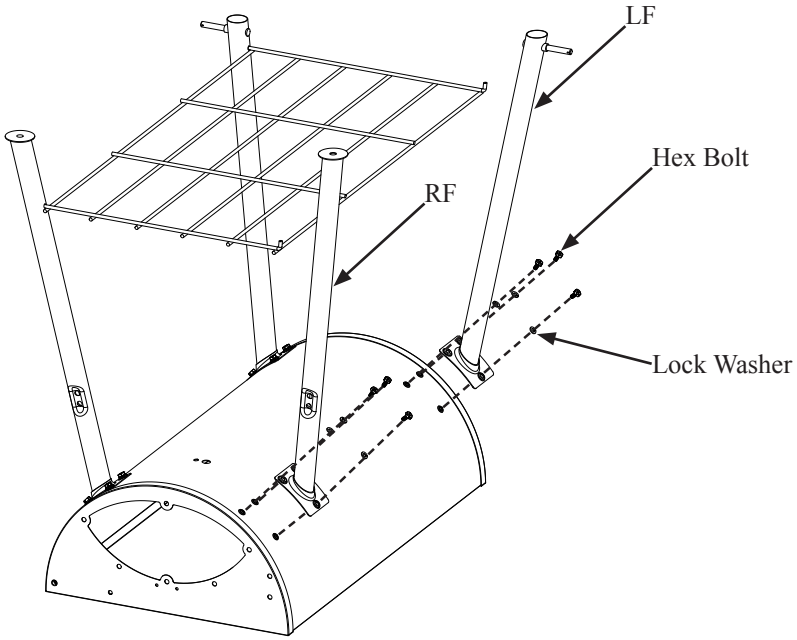

Step 3

Attach Wheels onto wheel Axle. Slide 2/5” Flat Washer, Wheel, and another 2/5” Flat Washer through Axle then slide Large Cotter Pin through the hole at the end of the Axle.

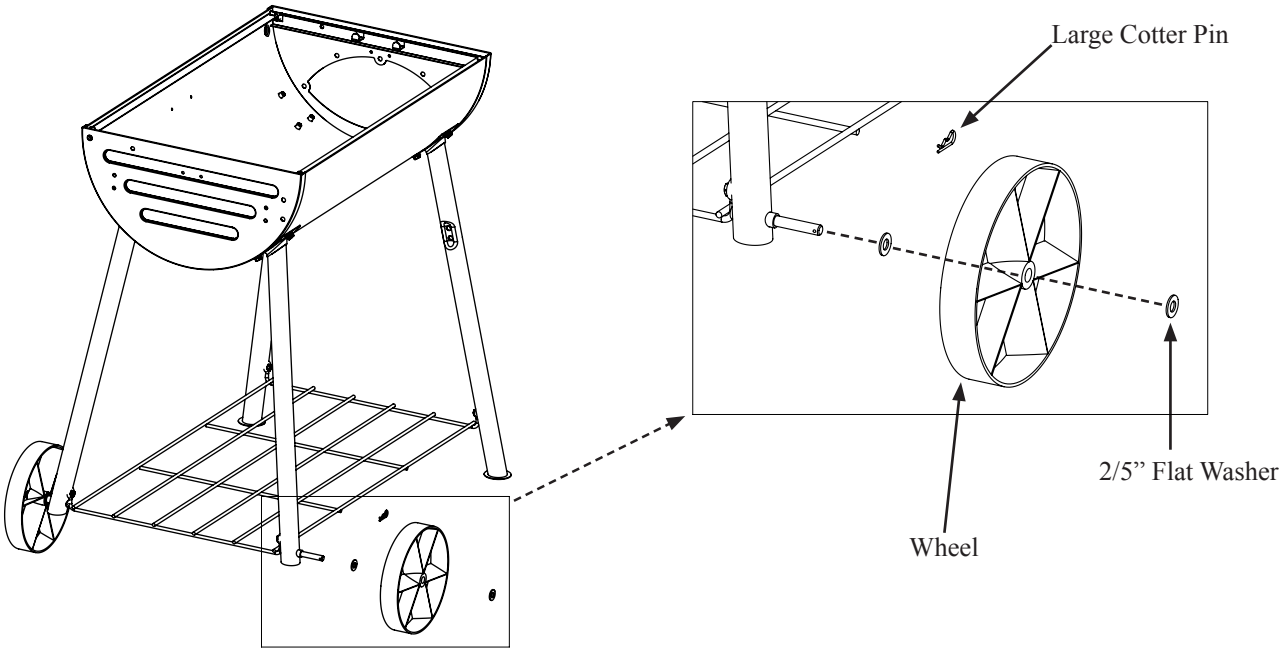

Step 4

Attach Grill Hood to Grill Body using two Hood Hinge Pins and two Small Cotter Pins.

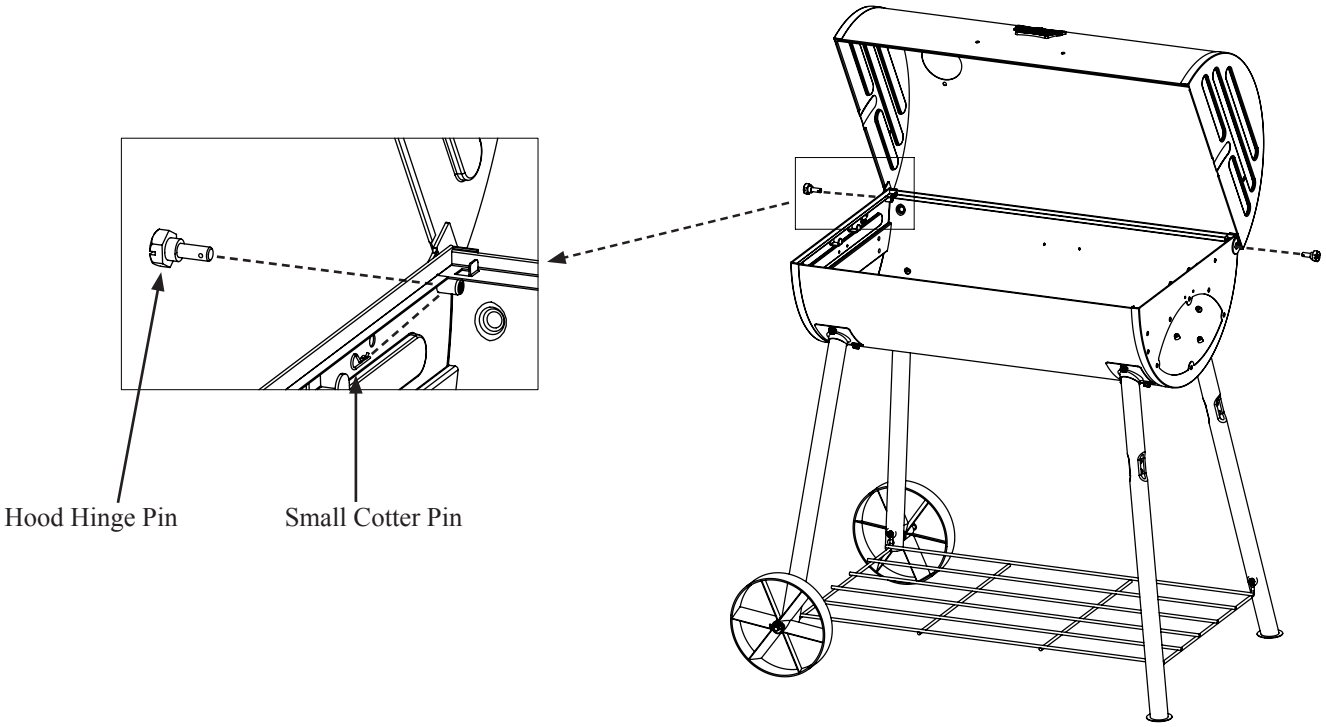

Step 5: Insert Thermometer through hole in Bezel and Grill Hood (from outside), through Flat Washer and secure with Wing Nut. Then attach Hood Handle to the Grill Hood with two ½" Hex Bolts, two Lock Washers, and two Hex Flange Nuts. Note: Hardware for Thermometer came attached with Thermometer.

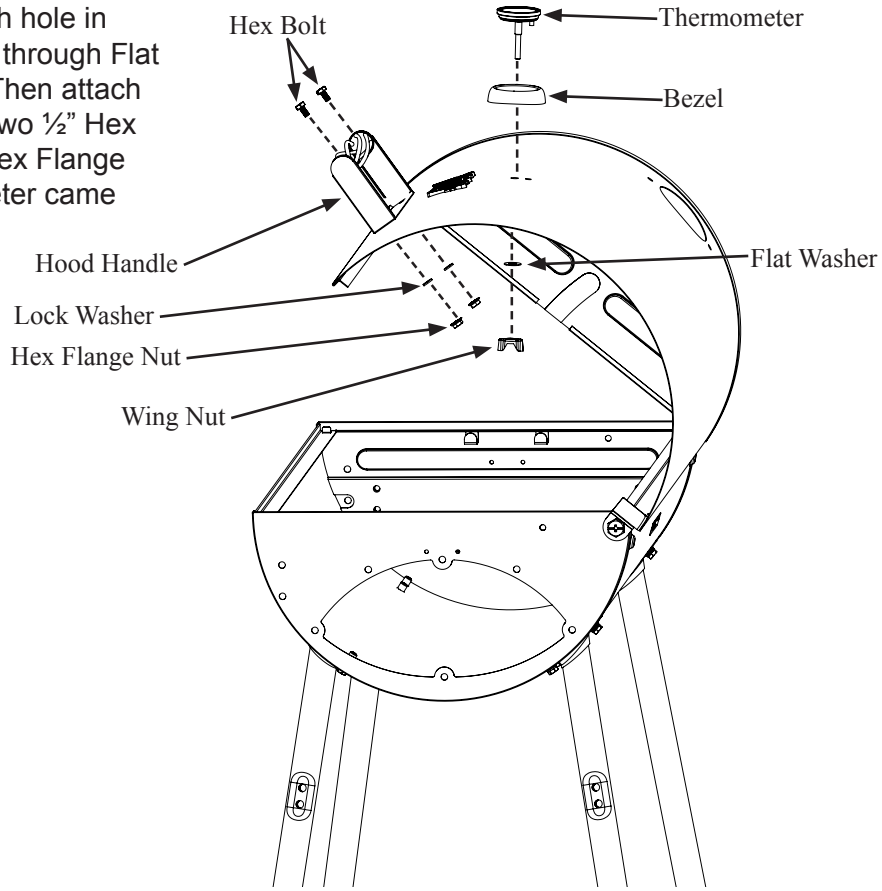

Step 6

Insert Smokestack Assembly through the hole on the Grill Hood from the inside of the Grill Hood then secure it with two ½" Hex Bolts and two Hex Flange Nuts.

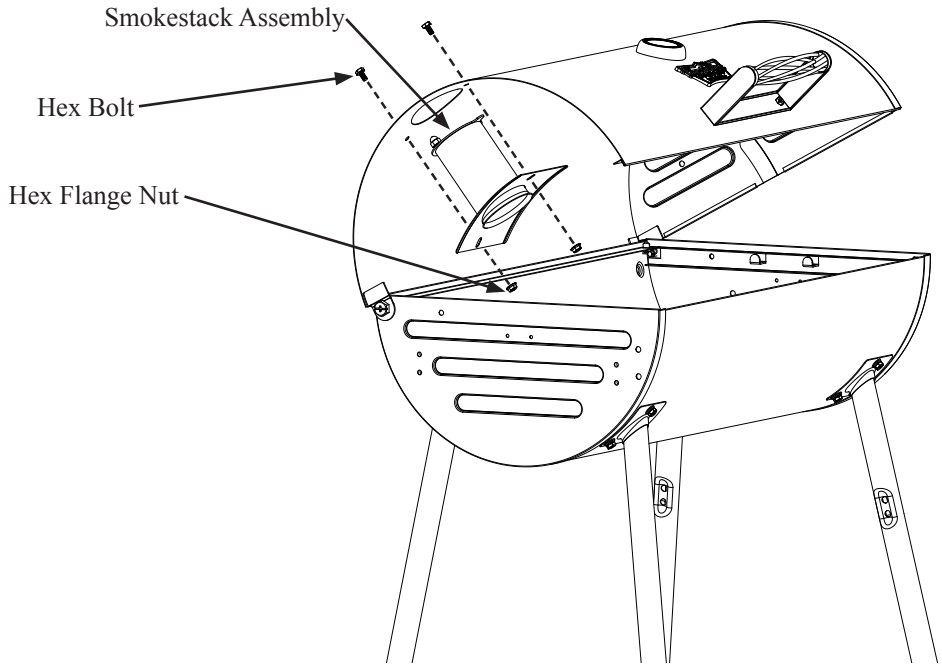

Step 7: Attach Side Shelf to Grill Body with four ¾” Hex Bolts and four Hex Flange Nuts.

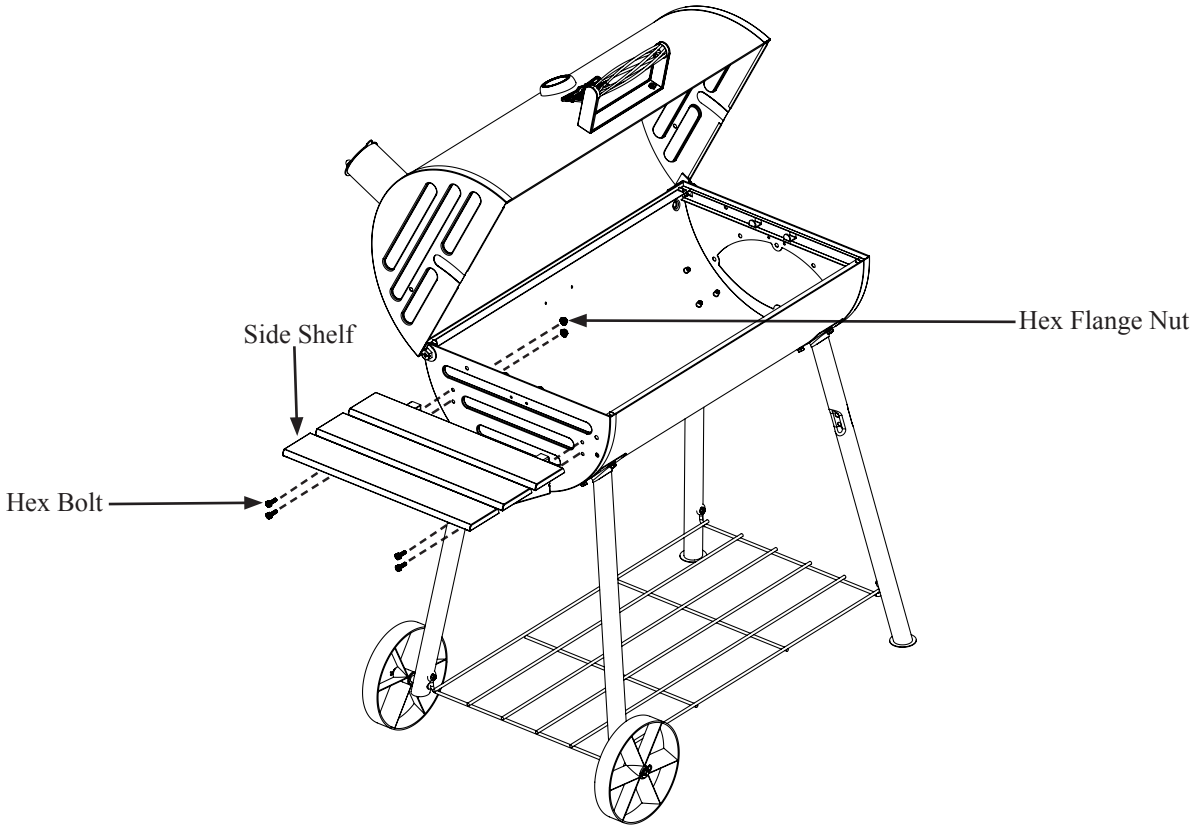

Step 8

Assemble the Front Shelf together using four ½” Hex Bolts then attach the Front Shelf to the Grill Body using four ¼”-20 Shoulder Bolts and four Hex Flange Nuts.

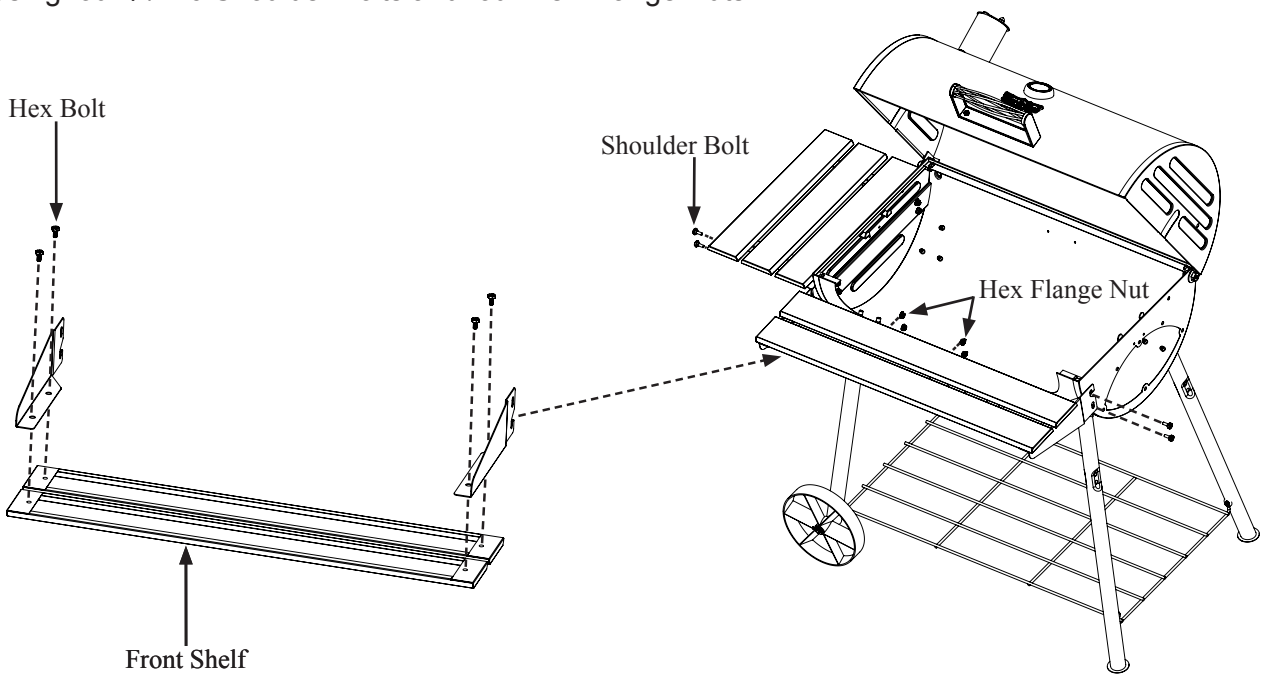

Step 9: Attach Warming Rack onto the Grill. First attach two 1 ½" Hex Bolts and two Hex Flange Nuts onto Grill Hood. Second attach two 1" Hex Bolts, two Hex Nuts and two Hex Flange Nuts onto Grill Body. Then position the Warming Rack onto the Hex Bolts.

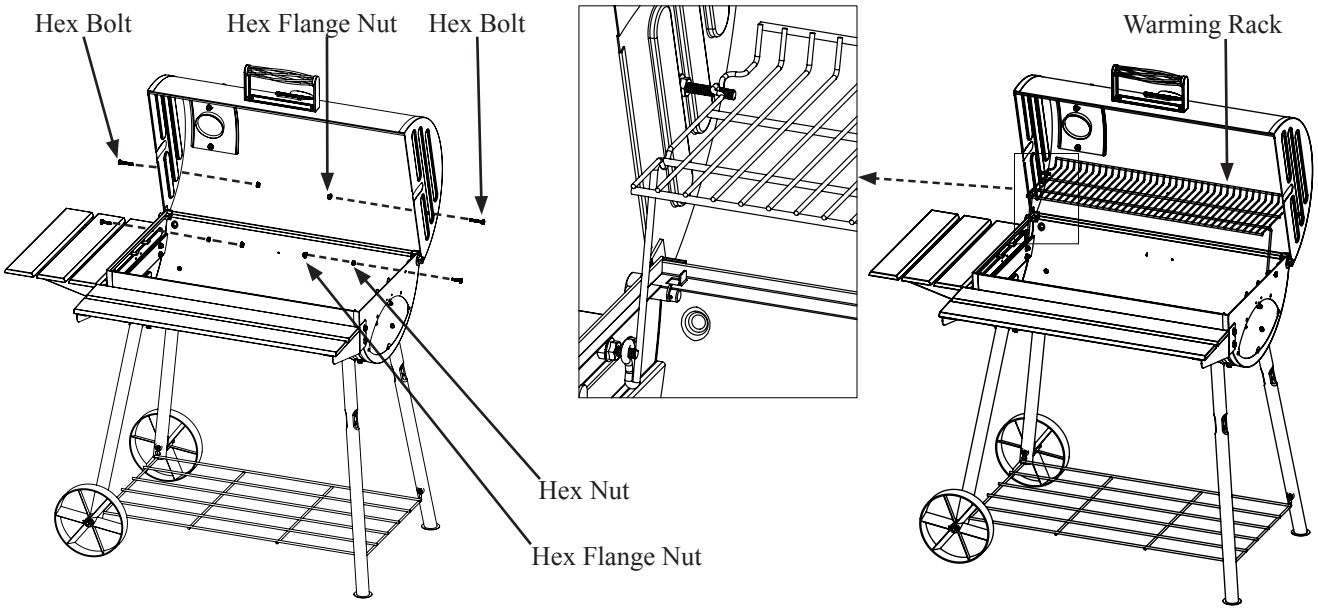

Step 10: Attach Side Fire Box Support Bracket to Grill Legs using four 1 ½" Hex Bolts and four Hex Flange Nuts.

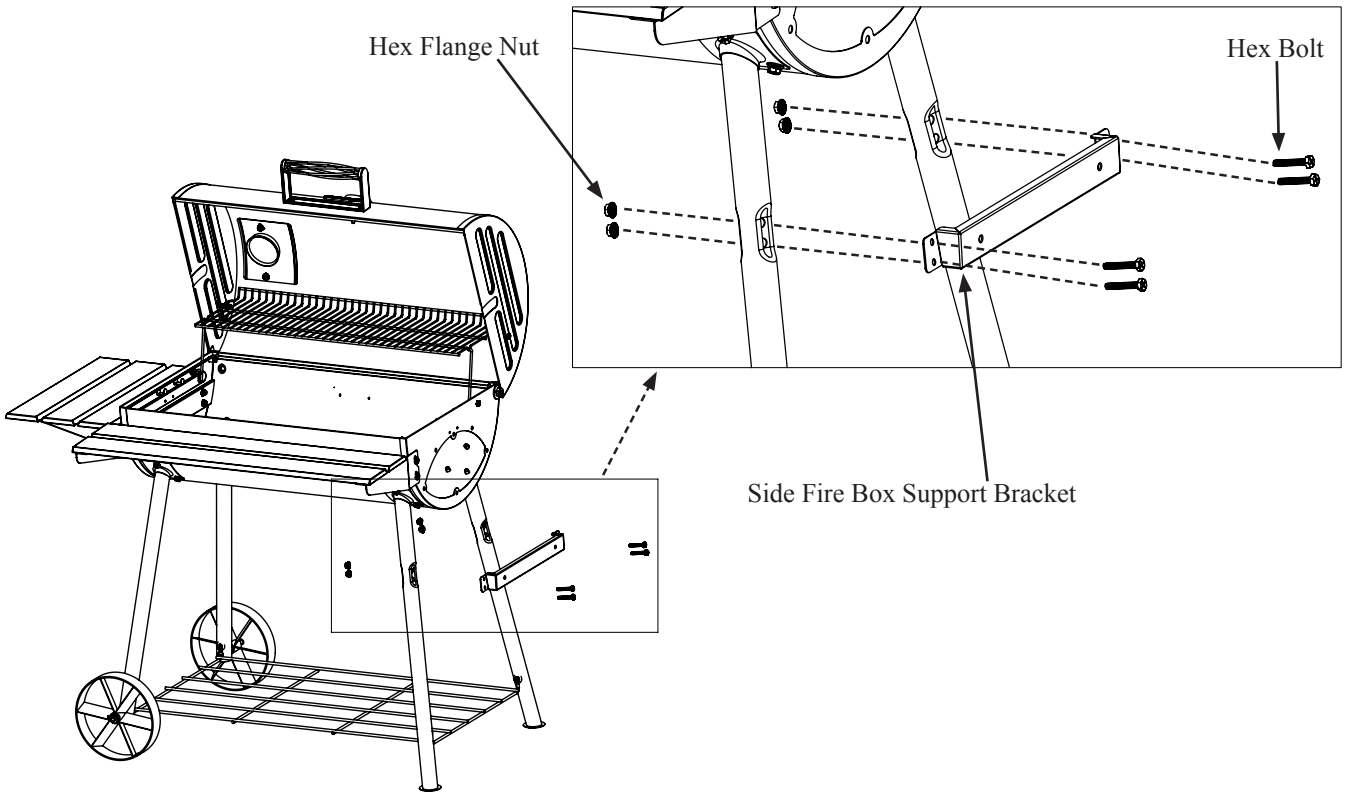

Step 11
Assemble Side Fire Box Top Half to Side Fire Box Bottom Half using four ½” Hex Bolts, four Lock Washers, and four ¼” Flat Washers.

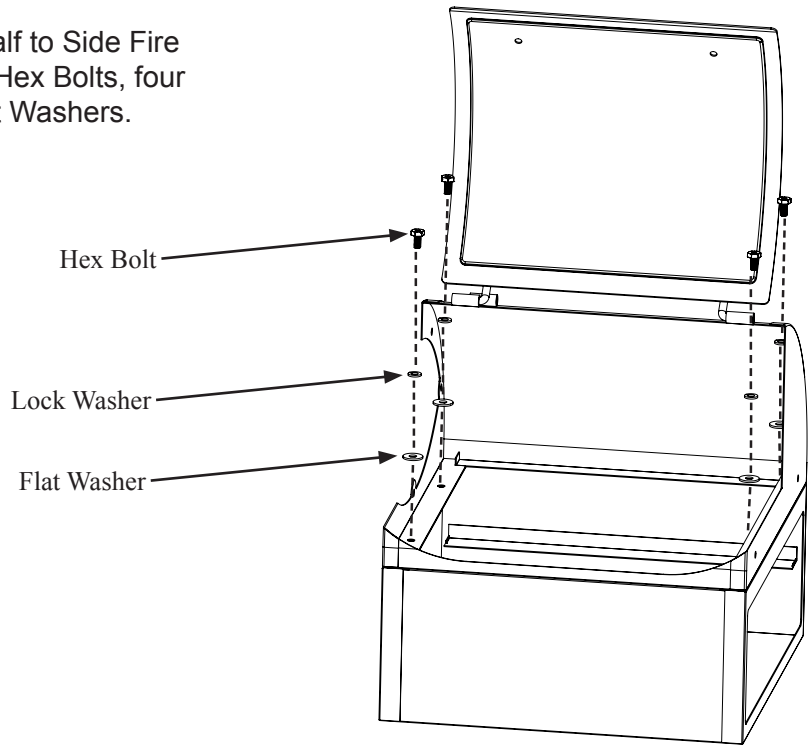

Step 12
Attach Side Fire Box to Grill Body using eight ½” Hex Bolts and six Hex Flange Nuts.

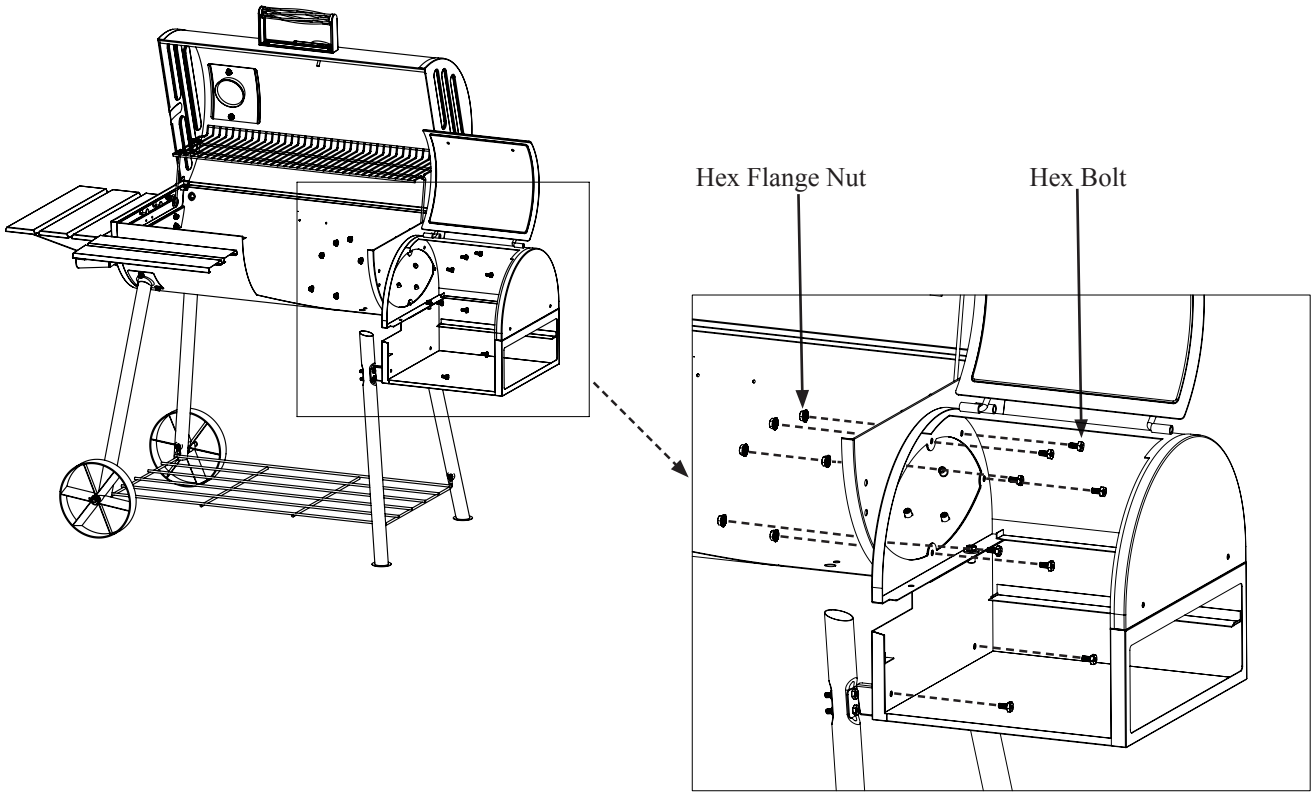

Step 13: Attach Side Fire Box Hood Handle using two ½" Hex Bolts, two Hex Flange Nuts, and two Lock Washers.

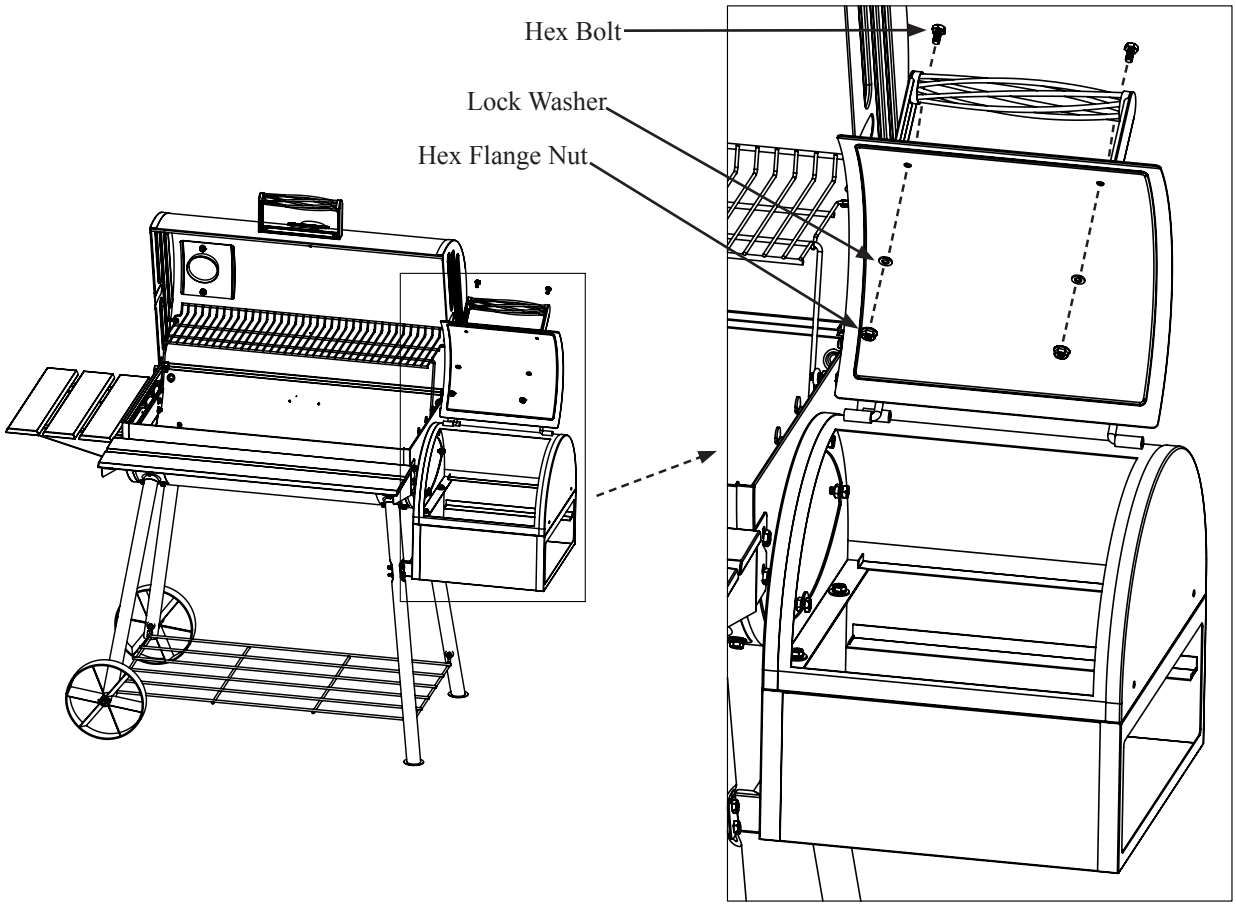

Step 14

Attach Side Fire Box Side Handle using two ½" Hex Bolts and two Hex Flange Nuts.

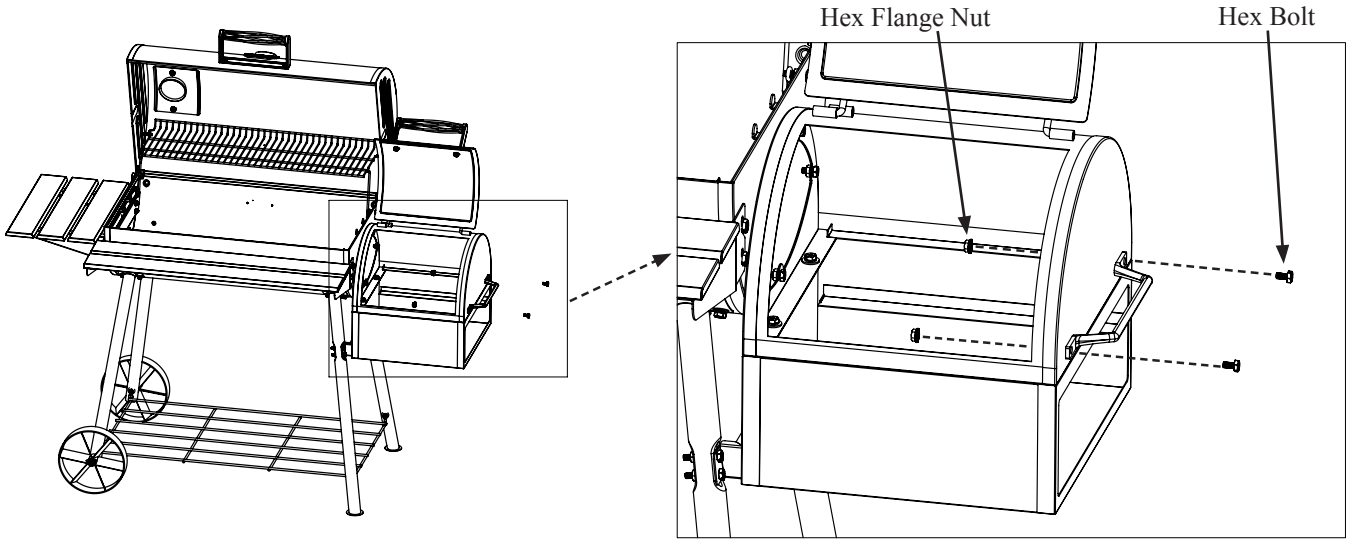

Step 15

Attach Damper to the Drawer using four #8-36 Shoulder Bolts and four #8-36 Hex Nuts. Then attach Drawer Handle to Drawer using two Hex Flange Nuts.

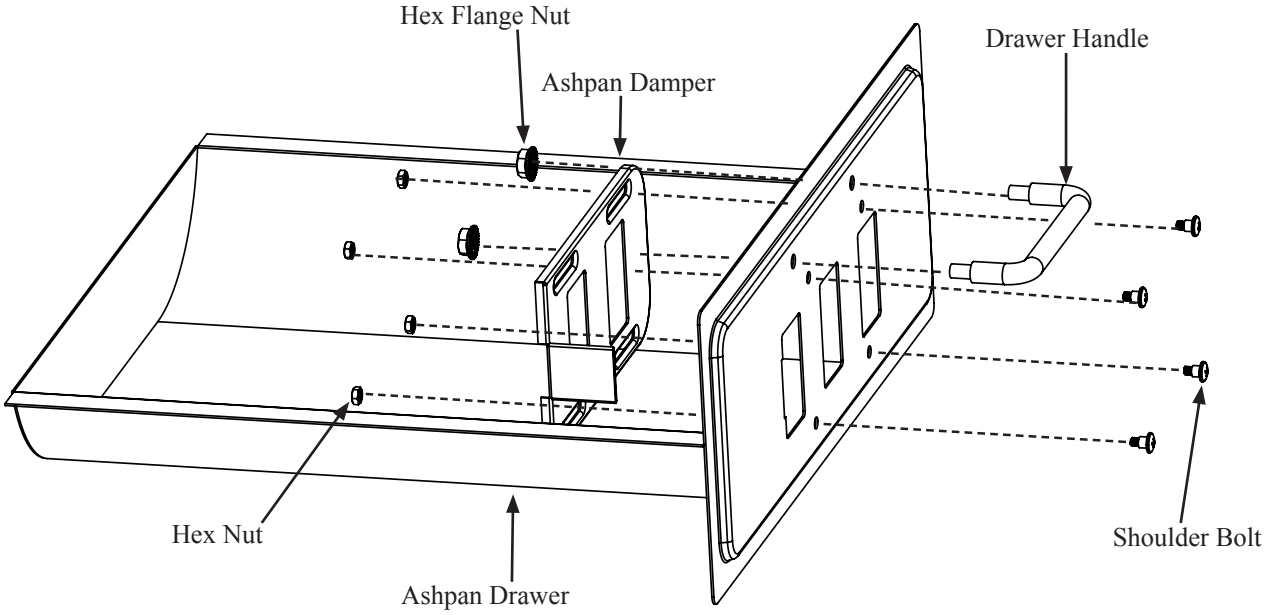

Step 16

Place Side Fire Box Charcoal Grate inside Drawer and slide Drawer into Side Fire Box Body.

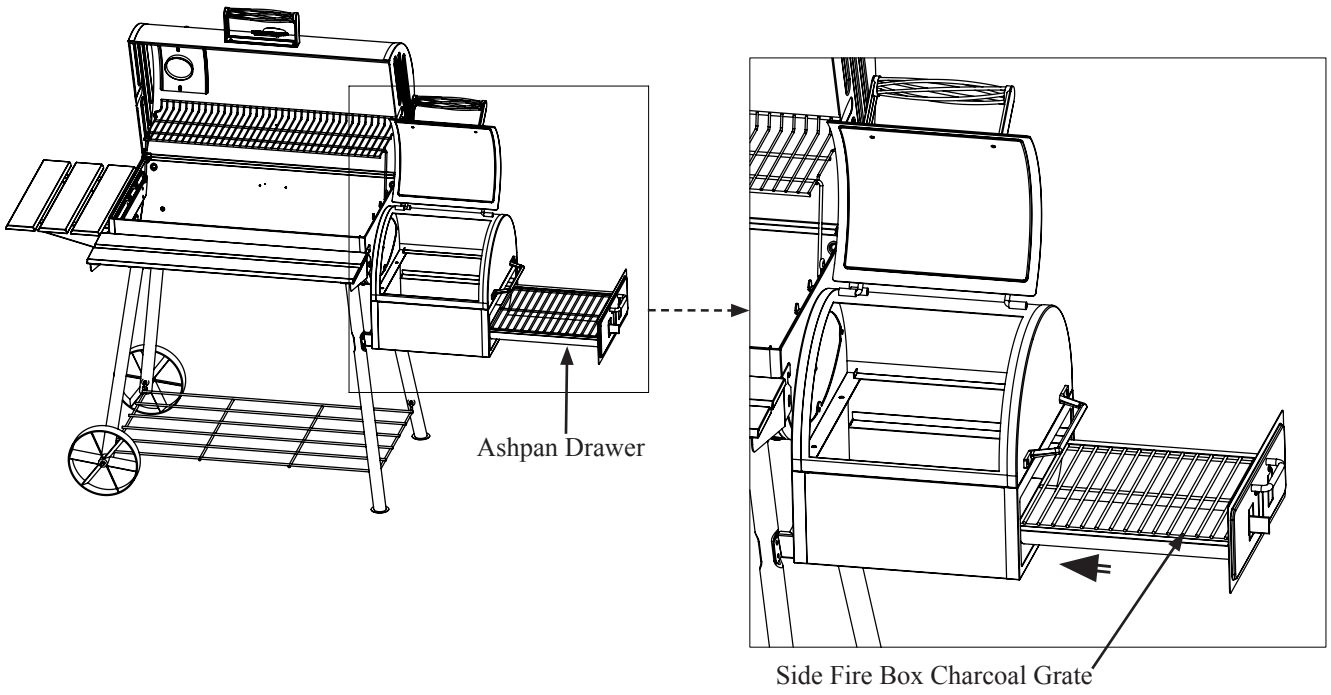

Step 17
Place Ashpan and Ashpan Hanger onto Grill Body.

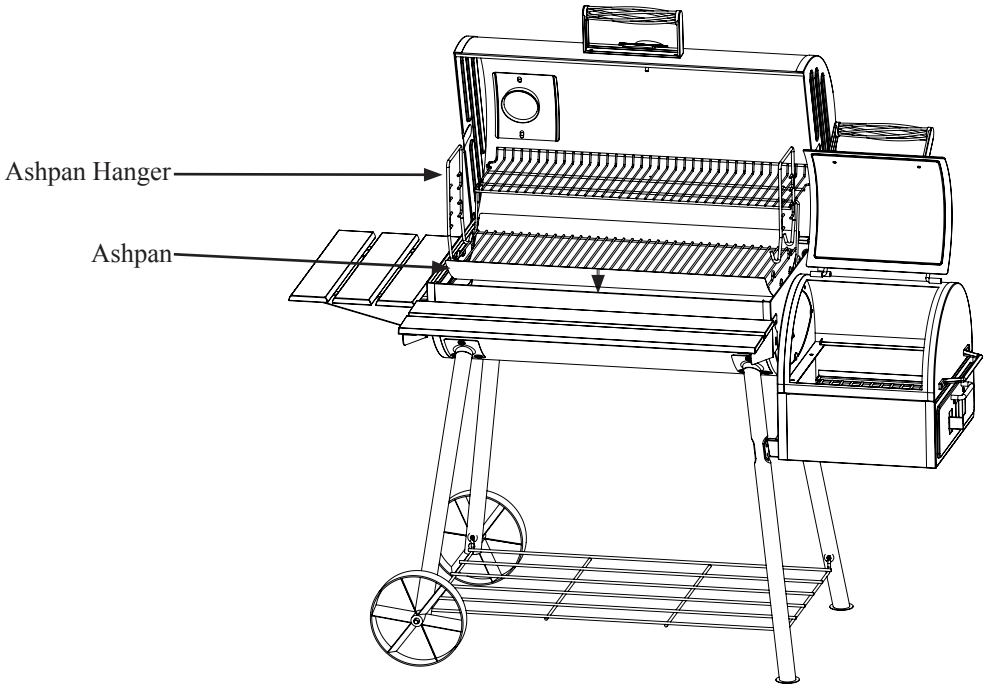

Step 18
Place Cooking Grates onto Grill Body then install the Utensil Hooks underneath each Side Shelf slab at the front of the Grill. Install the Grease Cup Holder underneath Grill Body.

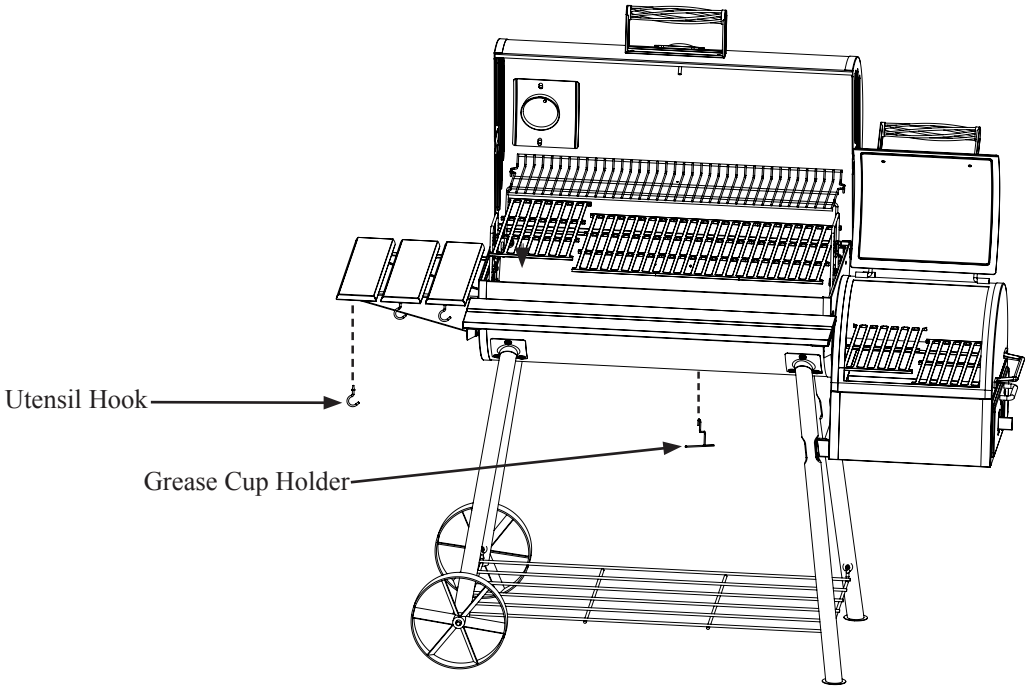

Fully Assembled

OPERATING INSTRUCTIONS

Setting Up

This grill is designed for use outdoors, away from any flammable materials. When in use, it is important that there are no overhead obstructions and that the grill is at least 12 ft. (~4 m) from any wall or surface. It is important that the ventilation openings of the grill are not obstructed.

The grill must be used on a level, stable surface. The grill should be protected from direct wind drafts and protected from any trickling water (i.e. rain or water from gutters). Do not move the grill while hot, and do not leave unattended during operation.

NEVER EXCEED **500°F** BECAUSE THIS WILL DAMAGE THE FINISH AND CONTRIBUTE TO RUST. PAINT IS NOT WARRANTED AND WILL REQUIRE TOUCH-UP. THIS UNIT IS NOT WARRANTED AGAINST RUST.

Lighting Instructions

There are a few methods to light your charcoal grill, depending on the materials you prefer to use. Using a charcoal chimney is the Char-Griller® preferred method for speed and convenience but igniting your lump charcoal or briquettes directly in the grill is a great way to get cooking as well.

Charcoal Chimney

1. Remove your grill grates and set them to side
2. Fill your charcoal chimney ¾ of the way full with briquettes or lump charcoal
3. Set fire starter on charcoal grate, light and then place the charcoal chimney directly on top of the fire starter
4. Coals will fire upward from bottom to top
5. After coals on top of chimney are ignited (usually 10-15 minutes) dump the coals over the charcoal grate and replace your grill grates

Fire Starters

1. Remove your grill grates and set them to side
2. Pour approximately 3lbs (approx. 40-45 briquettes) of charcoal directly on to your charcoal grate and stack together in a pile
3. Insert fire starter into the middle of the charcoal pile so that it is slightly covered and light
4. After the charcoal has thoroughly ignited, typically glowing red or gray in color, use tongs to spread them out and replace your grill grates

NOTE:

- Do not use lighter fluid, gasoline, kerosene, alcohol or other accelerant for lighting charcoal due to flammability, risk of bodily injury and potential to leave a distasteful flavor in your food.
- If necessary, use tongs to move coals for even heat.
- Always wear gloves when handling grill grates, charcoal grate, or adjusting coals.

Controlling Temperature

Controlling the temperature of your grill is all about controlling the air flow to the fire. MORE AIR = MORE HEAT. LESS AIR = LESS HEAT. By opening and closing the top and side dampers, you can easily control the temperature of your grill. The amount of charcoal used when grilling can also greatly impact your ability to control temperature. Dampers may need to be adjusted during the cook to account for changes in weather like wind or to accommodate for more or less fuel. When first learning how to operate your grill, always use the same amount of charcoal to best learn your grill's damper control.

SMOKE
150°-250°F

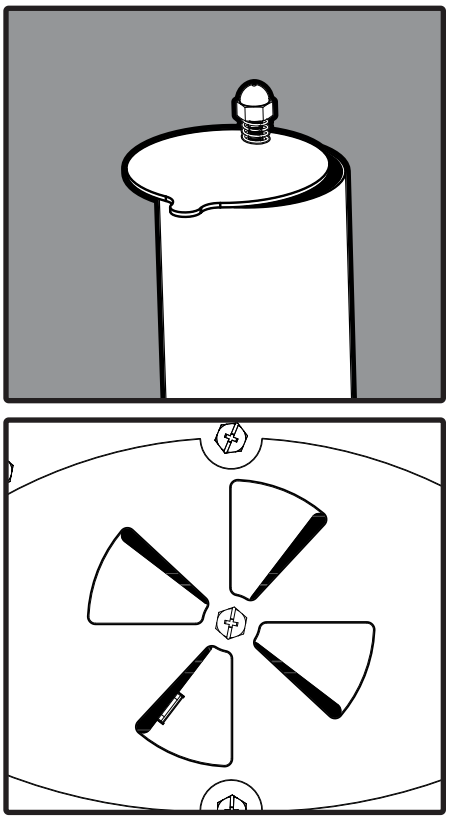

- Start with dampers 1/4 or less of the way open and adjust as needed during cook
- For best results, start with up to 2 lbs. of charcoal (30-35 Briquettes) and/or wood fuel
- Place coals on one half of the charcoal grate

GRILL
300°-450°F

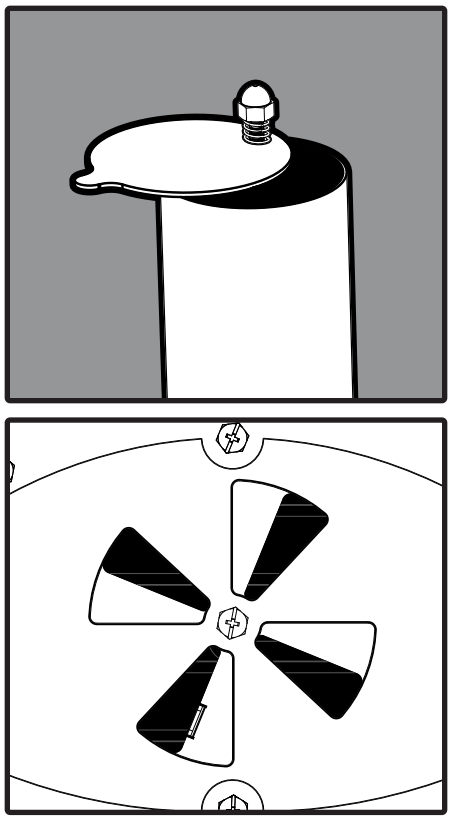

- Control airflow as needed, by adjusting dampers from 1/3-2/3 of the way open
- For best results, start with up to 2 lbs. of charcoal (30-35 Briquettes)
- Place coals as desired across the charcoal grate

SEAR
450°-500°F

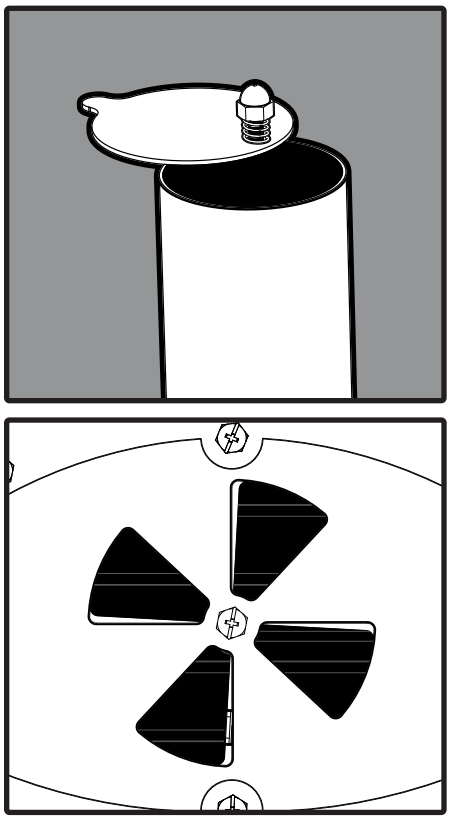

- For maximum airflow, both dampers should be open all the way with air flowing freely
- For best results, start with up to 3 lbs. of charcoal (40-45 Briquettes)
- Place coals as desired across the charcoal grate

Seasoning Your Grill

Seasoning is an important first step before you start cooking on your new grill. This process will help protect the interior and exterior grill finish, reduce food sticking to the grates, reduce unnatural flavors, and help prevent the grates from rusting. Char-Griller® recommends using flaxseed oil for seasoning your grill but most food grade oils (canola, grapeseed, vegetable, safflower, etc) will work as well.

STEP 1
LIGHTLY COAT WITH OIL

1. Char-Griller® grills come pre-coated with vegetable oil. If this is the first time seasoning your grill, move on to **Step 2**
2. If re-seasoning your grill, lightly coat ALL interior surfaces (including grates and inside of barrel) of your grill with flaxseed or other vegetable oil

STEP 2
HEAT UP GRILL

1. Following the instructions for lighting your charcoal (page C-2) and controlling the temperature (page C-3), bring your grill to approximately 450°F
2. Once at temperature, allow grill surfaces to season for 20 minutes

STEP 3
RE-APPLY OIL TO GRATES 5X

1. After 20 minutes, open your grill and carefully remove your grill grates with a grate lifter
2. Using a brush, re-coat both sides of your grates with flaxseed or other vegetable oil and return to your grill
3. Close lid and allow surfaces to season for 20 minutes
4. Repeat this process up to five times (Add more charcoal to maintain temperature as needed)
5. Your grill is now ready for use

NOTE:

- You can lightly coat the exterior of the grill body (while warm) with vegetable oil. This will extend the life of the finish, much like waxing a car.

Grilling Styles

Your Char-Griller® grill can be used to smoke, grill or sear your food. By using temperature zones, charcoal and wood flavor, you can customize your culinary experience as desired. The following descriptions provide four of the most common ways you can cook with your Char-Griller® charcoal grill.

Grill

Cook with direct and indirect heat at medium temperatures (300°-450°F). Utilize a two zone set up to cook at different speeds and temperatures.

1. Prepare up to 2 lbs (approximately 30-35 briquettes) of lit charcoal spread evenly across HALF the charcoal grate creating 2 Cooking Zones.
2. Once the grill is at the desired temperature, you may begin to cook. First place food over direct heat, cooking each side as desired. After initially cooking over direct heat, move to the cool zone (see picture at right) to bring your food to the desired internal temperature.

GRILL (Direct Heat) - 300°-450°F
Up to 2 lbs. Charcoal (30-35 Briquettes)

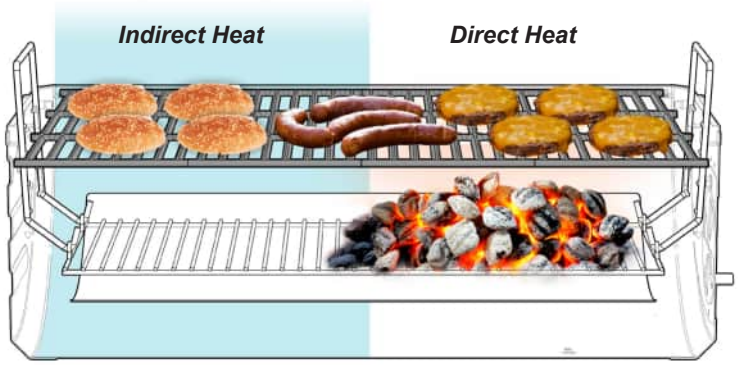

3. NOTE: Wood chips, chunks or split logs may be used in addition to charcoal to add smoke flavor as desired.

Sear

Quickly cook with direct heat at high temperatures (450°-500°F).

1. Prepare up to 3 lbs (approximately 40-45 briquettes) of lit charcoal spread evenly across charcoal grate.
2. Once the grill is at the desired temperature, you may begin to cook by placing food directly over the coals.
3. Food will cook quickly. Cook each side 3-4 minutes and then bring to desired internal temperature.
4. NOTE: Wood chips, chunks or split logs may be used in addition to charcoal to add smoke flavor as desired.

SEAR (HI-TEMP DIRECT HEAT) - 450°-500°F
Up to 3 lbs. Charcoal (40-45 Briquettes)

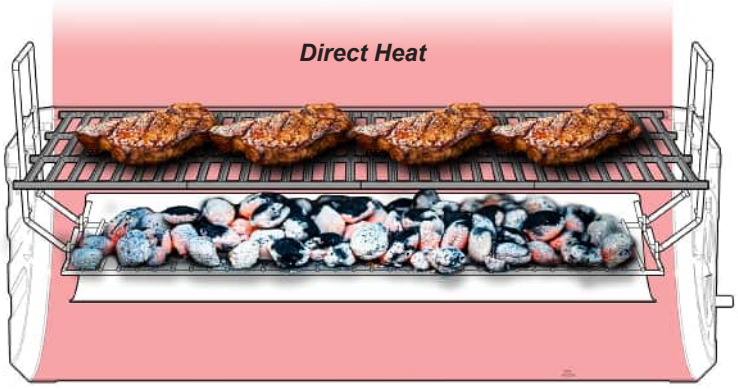

5. NOTE: Always sear with the grill lid open to prevent damage to exterior finish.

Smoke

Cook with indirect heat at low temperatures (150°-250° F). Use wood chips, chunks, split logs or pellets to add smoke flavor

1. Prepare up to 2 lbs (approximately 30-35 briquettes) of charcoal spread evenly across HALF the charcoal grate creating two cooking zones
2. Add wood chips, chunks, or split logs as desired to add smoke flavor
3. Once the grill is to desired temperature, you may begin to cook
4. Keep food over cool side of grill to cook with indirect heat over the duration of the cook

SMOKE (INDIRECT HEAT) -
Up to 2 lbs. Charcoal (30-35 Briquettes)

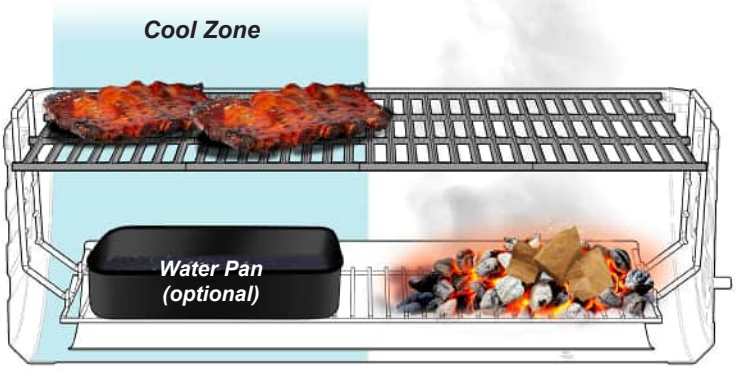

5. NOTE: Opening the smoking chamber will extend cooking time.

OFFSET SMOKE (INDIRECT HEAT) - 150-250°F
Up to 2 lbs. Charcoal (30-35 Briquettes)
and or wood fuel in the side fire box

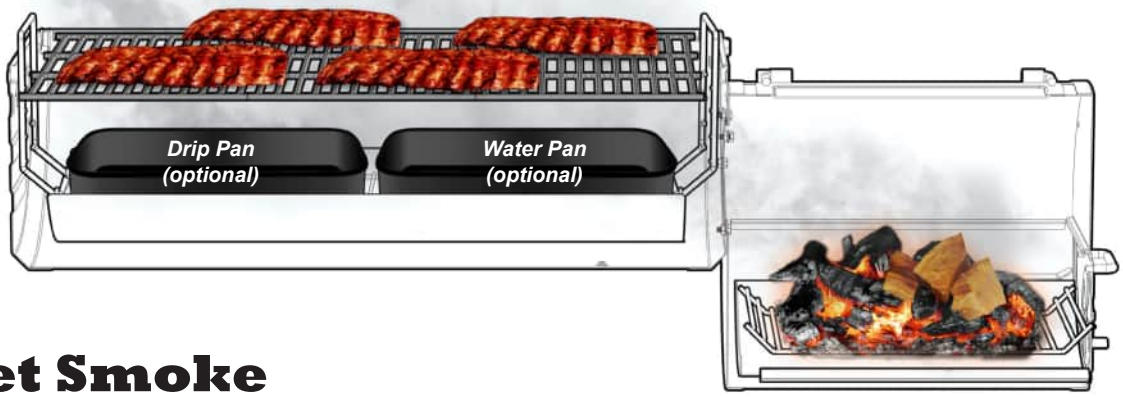

Offset Smoke

Cook with indirect heat from the side fire box at low temperatures (150°-250° F). Use split wood logs, chips, chunks, or pellets to add smoke flavor

1. Prepare up to 2 lbs (approximately 30-35 briquettes) of charcoal in the side fire box
2. Add wood chips, chunks, split logs or pellets as desired to add smoke flavor
3. Once the grill is at the desired temperature, begin to cook
4. Food placed closer to the side fire box will cook faster than food placed on the opposite side of the grill
5. NOTE: Opening the smoking chamber will extend cooking time.

Care & Maintenance

In order to keep your grill in the best shape, it's important to keep it clean and maintained. Continued cleaning and care are key to ensuring a long life for your Char-Griller® grill. Have questions? Call, email or chat online with Char-Griller® Customer Service!

FINISH UP

- When you are finished grilling, clean your grates with the Char-Griller® Grate Scrape and then lightly coat your grates with flaxseed or other vegetable oil
- Next close both dampers and the hood allowing the fire to suffocate
- Wait until coals and ash have completely cooled before attempting to clean up or remove

CLEAN UP

- Wait until the fire is completely extinguished and the grill is cool to the touch before emptying the ashes
- Remove grates from grill with grate lifter
- Remove ash pan from grill
- Give the ash pan a few firm taps to loosen any ash that may be stuck
- Dump the ashes in a metal container and cover with water to ensure there are no lit coals, then you can dispose of the ashes

COVER UP

- Extend the life of your grill by using a Char-Griller® custom fit grill cover to protect it from the elements
- Weather resistant polyester material protects against birds, dust, wind, rain and snow
- Check chargriller.com for your grill's custom fit cover

**** ONLY EMPTY ASHES WHILE GRILL IS NOT IS USE AND COOL TO TOUCH ****

IMPORTANT: Charcoal is porous and holds moisture. DO NOT leave charcoal in your grill while you are not using it. Charcoal and ashes left inside the ash pan may reduce the life of your grill.

General Grilling Tips & Warnings

Control heat with amount and type of fuel, dual dampers, and adjustable fire grate. Adjust fire grate one end at a time. Wood burns hotter than charcoal. More airflow helps generate more heat.

Additional charcoal and/or smoking woods may be added while cook is in progress. Wear gloves and apron when operating your grill.

Only use natural hardwoods intended for cooking. Appropriate selections can typically be found in grocery stores and outdoor grilling retailers.

When utilizing a water pan, check the water level when cooking more than 4 hours or when you can't hear the water simmering. Add water by moving meat over and pouring water through cooking grates into water pan.

To reduce flare-ups, cook with hood in the down position.

When cooking with charcoal, leave the grill hood open during the initial start up and until coals ash over. The grill hood must remain open anytime the temperature gauge is greater than 500°F.

Always put charcoal on top of the charcoal grate and not directly into the bottom of the grill.

Do not use self-starting charcoal as it will give food an unnatural flavor.

Ashes left in grill too long between uses will absorb moisture and will cause rust. Be sure to empty ash after grill has cooled. Uncoated steel and cast-iron will rust when not properly cared for.

On the EXTERIOR PAINT, remove rust with wire brush and touch up with a high heat paint, available at most hardware/auto stores. Rustoleum® #241169 is the best color match.

Heat gauge may retain moisture, which will steam out during cooking. Gauge can be removed and calibrated in oven.

For a more tightly sealed grill, fill unwanted holes with nuts and bolts (not included).

Attach a metal can to the grease cup holder or on bottom shelf under the hole in the grill to catch drippings.

Smokestack and side dampers will be hot. Only touch using gloves or mitts.

Before you use your grill for the first time you must season the cast iron cooking grates.

After each use, coat the interior grates and bare metal with vegetable oil while warm to reduce the chance of rust. Proper and regular seasoning will protect against rust and extend the life of your grill and cooking grates.

Grill will drip oil during the seasoning process and for several uses afterwards, this is normal.

Never exceed 500°F because this will damage the finish and contribute to rust.

Paint is not warranted and will require touch up.

This grill is not warranted against rust.

DO NOT use lighter fluid, gasoline, kerosene, alcohol or other accelerant for lighting charcoal. Use of any of these or similar products could cause an explosion possibly leading to severe bodily injury.

NOTE: Smoke may escape from areas other than the smokestack. This will not affect cooking

CHAR-GRILLER® DOES NOT ACCEPT RETURNS ON USED GRILLS.

Cooking Guidelines

BEEF	HEAT TYPE	HEAT LEVEL	AVG. COOKING TIME
SKIRT STEAK, MEDIUM 1-INCH THICK	Direct Heat	High Heat	4-6 MIN.
HOT DOG 4 OUNCES	Direct Heat	Medium Heat	5-7 MIN.
STEAK, MEDIUM 1-INCH THICK - FILET MIGNON, RIBEYE, NEW YORK STRIP & PORTERHOUSE	Direct Heat	High Heat	6-8 MIN.
BURGER 3/4 - INCH THICK	Direct Heat	Medium Heat	8-10 MIN.
HANGER STEAK, MEDIUM 1-INCH THICK	Direct Heat	Medium Heat	8-10 MIN.

PORK	HEAT TYPE	HEAT LEVEL	AVG. COOKING TIME
PORK CHOP, MEDIUM 1-INCH THICK	Direct Heat	Medium Heat	8-10 MIN.
SAUSAGE 3-OUNCE LINK	Direct Heat	Medium Heat	10-13 MIN.
PORK TENDERLOIN 1 POUND	Direct Heat	Medium Heat	15-20 MIN.
PORK SHOULDER/BUTT 8 POUNDS	Smoke	Low Heat	12 HOURS *APPROX. 90 MIN / LB.*

CHICKEN	HEAT TYPE	HEAT LEVEL	AVG. COOKING TIME
CHICKEN BREAST OR THIGH 4 OUNCES - BONELESS, SKINLESS	Direct Heat	Medium Heat	8-12 MIN.
CHICKEN THIGH OR LEG 3-6 OUNCES - BONE-IN*	Indirect Heat	Medium Heat	35-45 MIN.
CHICKEN BREAST 10-12 OUNCES - BONE-IN*	Indirect Heat	Medium Heat	35-45 MIN.
WHOLE CHICKEN* 8 POUNDS	Smoke	Low Heat	3-5 HOURS

**BONE-IN CHICKEN SHOULD INITIALLY BE COOKED OR "BROWNED" OVER DIRECT HEAT FOR SEVERAL MINUTES BEFORE BEING TRANSFERRED TO INDIRECT HEAT.*

SEAFOOD	HEAT TYPE	HEAT LEVEL	AVG. COOKING TIME
SHRIMP LARGE	Direct Heat	High Heat	4-6 MIN.
SCALLOP 1 1/2 OUNCES	Direct Heat	High Heat	4-6 MIN.
FISH, FILET 1-INCH THICK	Direct Heat	High Heat	5-10 MIN.
FISH, WHOLE 1 POUND	Indirect Heat	Medium Heat	15-20 MIN.

HEAT KEY

- DIRECT HEAT
- INDIRECT HEAT
- SMOKE
- LOW HEAT 150°-250°F
- MEDIUM HEAT 300°-450°F
- HIGH HEAT 450°-550°F+

USDA SAFE MINIMAL INTERNAL TEMPS

- FISH & SHELLFISH: **145°F**
- BEEF OR PORK STEAKS OR CHOPS: **145°F**
- GROUND BEEF OR PORK: **160°F**
- CHICKEN: **165°F**

Cook times outlined in this chart are general guidelines that may vary depending or desired doneness, thickness, amount of each item being cooked, grill or grilling style, ambient temperature and/or weather. Char-Griller® recommends always using a cooking thermometer to gauge the internal temperature of all meat products.

ENHANCE FLAVOR

Wood Pairing Guide

Different wood varieties possess different flavors and Char-Griller® recommends pairing your woods with the meats you intend to cook.

WOOD	FLAVOR	BEEF	PORK	POULTRY	SEAFOOD	VEGGIES
ALDER	MILD			✓	✓	
MAPLE	MILD			✓		✓
CHERRY	MILD		✓	✓	✓	
APPLE	MEDIUM	✓	✓	✓	✓	
PECAN	MEDIUM	✓	✓	✓	✓	✓
OAK	MEDIUM	✓	✓	✓	✓	✓
HICKORY	STRONG	✓	✓			
MESQUITE	STRONG	✓	✓			

GRILLING RECIPES

- Cooking with a MEAT THERMOMETER ensures food is fully cooked. Insert thermometer into the thickest part of the meat, not touching bone, and allow 1 to 1 1/2 minutes to register temperature.
- USDA Safe Minimal Temperature is 165°F for chicken / poultry.
- USDA Safe Minimal Temperature is 145°F for Beef, Pork, Veal & Lamb (Steaks, chops, roasts).

Direct Heat Recipes

GRILLED FLANK STEAK WITH VEGETABLES

A vastly under-appreciated meat, the flank steak can be a flavorful and fast meal for the weeknights. Get dinner on the table in under 20 minutes and use a charcoal grill to get all the best flavors of summer with this flank steak recipe.

Ingredients:

1.5 Pound Flank Steak
1.5 tsp of Smoked Paprika
2 Garlic Cloves, Minced
Salt and Pepper to Taste
4 Ears of Corn
2 Large Zucchini, Cut in Half Lengthwise
1 Pint Cherry Tomatoes
3 Tbsp of Olive Oil
1.5 Tbsp of Fresh Rosemary, Chopped
1 Tbsp of Red Wine Vinegar
2 Garlic Cloves, Minced (Oil Dressing)
2 Tbsp of Canola Oil

Instructions:

1. Season flank steak with paprika and garlic. Rub on all sides and season with salt and pepper.
   Brush with canola oil.
2. Brush corn, zucchini, and tomatoes with canola oil and season with salt and pepper.
3. Preheat the grill to medium high heat.
4. Add flank steak to grill, flip once and cook to desired internal temperature. About 4 to 6 minutes per side, let rest 5 minutes.
5. Add vegetables to grill and turn occasionally until lightly charred all over.
6. Whisk olive oil, rosemary, red wine vinegar, garlic and salt and pepper to taste in a small bowl.
7. Brush steak and drizzle vegetables with olive oil mixture and serve with steak immediately.

CHAR-GRILLER® ORIGINAL MARINATED FLANK STEAK

Meat Marinade Ingredients:

1/2 cup Olive Oil
1/3 cup Soy Sauce
1/4 cup Red Wine Vinegar
2 tbsp. Lemon Juice
1 tsp. Dry Mustard
1 minced Garlic Clove
1 small Onion, minced
1/4 tsp. Pepper

Instructions:

1. Mix marinade ingredients in nonmetal dish.
2. Let steak stand in marinade for no less than 4 hours in refrigerator.
3. Sear each side over high heat for 5 minutes; cook to desired internal temperature.
4. Cut steak diagonally across the grain into thin slices before serving.

QUICK AND EASY GRILLED PORK TENDERLOIN

Need dinner in a hurry? This quick and easy pork tenderloin recipe is a crowd pleaser. Pair with grilled red potatoes and asparagus for a simple but flavorful dinner!

Ingredients:

2 Pork Tenderloins
2 tsp Paprika
1 tsp Garlic Powder
1 tsp Cilantro
1 tsp Oregano
Salt and Pepper to Taste
Olive Oil

Instructions:

1. Blend spices together in a bowl. Rub pork with olive oil and then season liberally on both sides with spice blend.
2. Set up your Char-Griller® for direct cooking. Ignite burners and turn to medium high.
3. Place pork on the grill and cook for 8 to 10 minutes per side or until the internal temperature reads 165°F or until desired internal temperature (USDA Safe Minimal Temperature for Pork is 145°F).
4. Remove from the grill and let rest for 10 minutes.

HAMBURGERS

Season to taste with Char-Griller® "Original" All-Purpose or Steak Seasoning.
You may also marinate by allowing to stand in marinade for 1 or 2 hours at room temperature before cooking, or let stand in covered dish in refrigerator up to 24 hours.

Instructions:

1. Bring to room temperature before cooking.
2. Mix in chopped onions, green peppers, salt, sear 3/4 inch patties on each side.
3. Cook over medium heat with lid down to avoid flare-ups.
4. Cook each side 3 to 7 minutes according to desired temperature.
5. Ground meat will be done when juices run clear (USDA Safe Minimal Temperature for ground meat is 160°F).
6. Burgers can be basted with marinade when turning and/or other ingredients can be mixed in with the ground beef such as chili sauce or powder.

JUICY LUCY HAMBURGERS

If you think there is no way that the classic hamburger could get better, just wait until you try the Char-Griller® Juicy Lucy Burger. Packed with flavor and melted cheese, these burgers are sure to be a hit this summer.

Ingredients:

1.5 lbs Ground Beef
1/2 Packet of Dry French Onion Soup Mix
1/4 Cup of French Dressing
2 Tbsp of Worcestershire
1/2 tsp of Salt
1/4 tsp of Black Pepper
Block of Cheddar Cheese

Instructions:

1. Slice cheese into blocks approximately ¼ inch thick and 2 inches wide by 2 inches tall.
2. Add French Onion Soup Mix, Salt, Pepper, French Dressing, and Worcestershire sauce to ground beef and mix well.
3. Take a portion of the meat and form into a patty.
4. Put the cheese block in the middle of the patty and wrap the cheese completely with the beef. Form a patty with the cheese inside.
5. Repeat with the remaining beef and cheese.
6. Preheat the grill to 400°F
7. Cook burgers for 3 minutes on the first side and then flip.
8. Cook the burgers for 6 minutes on the other side. Ground meat will be done when juices run clear (USDA Safe Minimal Temperature for ground meat is 160°F).
9. Add desired toppings and enjoy!

SHRIMP (Peeled) & CRAYFISH

Instructions:

1. Place on skewers.
2. Coat with melted butter and garlic salt.
3. Grill 4 minutes on each side or until pink. Cocktail sauce optional.

HOT DOGS

Instructions:

1. Grill with lid open for approximately 6 minutes.
2. Turn every few minutes.

JALAPEÑO BACON BLANKET POPPERS

Need and easy to make snack for this big game? These Jalapeno Bacon Blanket Poppers are a crowd pleaser and are super easy to whip up on the grill. The bacon gets crispy quickly and doesn't burn easily since it's just sitting on top of the cream cheese filling. Easy, delicious and the perfect size for an appetizer, your friends and family will be asking you to make these again and again!

Ingredients:

4 Jalapeños
Char-Griller® Steak Rub to Taste
1/3 Cup Cream Cheese
3 Slices of Bacon
Shredded Cheese to Taste

Instructions:

1. Mix cream cheese, shredded cheese, Char-Griller® Steak Rub in a bowl and set aside.
2. Slice jalapeños through the middle to make it boat shaped.
3. Using a spoon remove the pith and seeds to create room for the filling.
   Tip: If you like heat then leave some seeds behind. Seeds provide the heat.
4. Fill jalapeños with filling.
5. Slice bacon into small strips then lay it over the filling on the jalapeños.
6. Sprinkle a small portion of the Char-Griller® Steak Rub on top of the bacon.
7. Fire up your Char-Griller® Grill to 400°F.
8. Place Jalapeño Bacon Blanket Poppers in the grill/smoker and smoke for 30 minutes or when the bacon is golden brown. Remove and enjoy!

Indirect Heat Recipes

HASSLEBACK POTATOES

A side dish that can basically be a meal in and of itself, these Hassleback Potatoes can be completely customized with toppings and types of cheese!

Ingredients:

6 Russet Potatoes
1 Pack of Cheddar Cheese Slices
1 Pack of Pepper Jack Slices
Chipotle Powder
Oregano
Salt and Pepper to Taste
Cooked Bacon (Diced)
Chives (Sliced)
Sour Cream

Instructions:

1. Set up your grill for indirect cooking.
2. Cut thin slices in the width of the potatoes, but be careful to not slice all the way through.
3. Wrap the potatoes in foil and place on the side of the grill away from the flames. Allow to cook until tender, about 45 minutes to an hour.
4. Remove potatoes from the grill and unwrap.
5. Place alternating slices of cheddar and pepperjack in the potato.
6. Season potatoes with chipotle powder, salt, pepper, and oregano.
7. Place potatoes back on the grill unwrapped for 10 to 12 minutes or until cheese is melted.
8. Garnish with bacon, chives, sour cream and serve.

SWEET CORN IN HUSKS

Instructions:

1. Trim excess silk from end and soak in cold salted water 1 hour before grilling.
2. Grill 25 minutes – turning several times.

GARLIC PARMESAN CHICKEN WINGS

Replicate the signature flavors of your favorite wing spot with this marinated Garlic Parmesan Recipe.

Ingredients:

4 lbs. of Chicken Wings
16 oz. Bottle Italian dressing
1 Cup of Shredded Parmesan Cheese
1/2 Tbsp. Onion Salt
1/2 Tbsp. Black Pepper
1 Cup of Butter
1 Tbsp. Oregano
2 Tbsp. Garlic Powder
A pinch of rosemary

Instructions:

1. Marinate wings overnight or at least four hours in Italian dressing
2. Add charcoal to one side of grill for indirect grilling, or use Smokin' Stone™ and add flavored wood chips/ chunks if desired
3. Let grill preheat to 275˚F
4. Place wings on indirect heat side of grill
5. Smoke wings for 45-60 minutes, until internal temp reaches 170˚F
6. While wings are smoking, make garlic Parmesan sauce by mixing Parmesan cheese, garlic powder, onion salt, black pepper, butter, oregano and rosemary
7. Remove wings from grill and toss in garlic Parmesan sauce

CEDAR PLANK SALMON

Think you can't get the perfect smoked salmon? Think again. With indirect grilling, you can get the perfect cedar plank soaked salmon every time.

Ingredients:

2 Cedar Planks
2 Salmon Filets
Olive Oil
Rosemary
Salt and Pepper to Taste

Instructions:

1. Soak cedar planks in water for at least 8 hours.
2. Set up your grill for Indirect cooking
3. Add 30 to 40 charcoal briquettes to one side of the grill
4. Ignite charcoal
5. Once charcoal is lit, allow to fully ash over
6. Rub salmon on both sides with olive oil.
7. Season with salt and pepper, rosemary sprigs and slices of lemon
8. Place salmon on the side of the grill away from the charcoal
9. Cook salmon for 15 minutes or until flakey.

CHILI-LIME CHICKEN THIGHS

Perfect for tacos, fajitas, nachos, or as a dish all on it's own, this Chili-Lime Chicken Thighs Recipe, prepared by our ambassador, BBQFiends, can be quickly cooked on a grill for a weeknight meal or cooked with charcoal on the weekend to add just the right kick of smokey flavor.

Ingredients:

3 Lbs Chicken Thighs
2 Tbsp Favorite BBQ Chili Seasoning
1 Lime
Chopped Cilantro for Garnish
1 Lime Juiced (Marinade)
1 - 12 oz Beer (Marinade)
Salt & Pepper to Taste (Marinade)

Instructions:

1. Trim excess fat off chicken thighs and place in a large bowl. Add the marinade ingredients and let sit in the refrigerator for 1-2 hours before cooking.
2. Remove chicken from marinade and season with your favorite BBQ chili seasoning. Get the grill up to 375° F and place the chicken over indirect heat.
   Tip: To get crispier chicken skin flip the chicken over about half-way through the cook and move to direct heat. Make sure internal temp is at least 165°F before removing for the grill.
3. Pull the chicken and garnish with chopped cilantro and a squeeze of lime over the top.
4. Serve and enjoy!

Smoking Recipes

"CERTIFIED" PORK BUTT

A great pork butt recipe perfect for beginners and pitmasters alike. This slow smoked pork butt recipe is great shredded and piled high with coleslaw for a sandwich or eaten on it's own straight out of the pan!

Ingredients:

2 Pork Butts (6-10 lbs. each)
Apple juice
Your favorite rub/seasoning
Mustard

Preparing the Meat:

1. Remove the pork butt from the plastic wrap & pat dry using a paper towel.
   Tip: Choose a pork butt with a full fat cap. This helps the meat while it's smoking for a long period of time.
2. Trim the excess fat that is loose and pulls up easily. Score the fat cap 1/8 to 1/4-inch-deep diagonally, spaced out 1/2 to 1 inch apart.
   Tip: Scoring the meat allows the seasoning and smoke to penetrate into the pork butt.
3. Fill the marinade injector with apple juice and inject into the top and sides of the meat.
4. Spread a coating of mustard using a basting brush all over the pork butt.
5. Tip: This allows the rub to stick to the pork butt.
6. Generously season the pork butt on all sides with your favorite rub.
   Tip: After seasoning, wrap in Saran Wrap and store in the refrigerator overnight or 8-10 hours. This allows the rubs to penetrate and apple juice to tenderize the pork butt.

Cooking Directions:

1. Ignite charcoal and preheat the smoker to 225°F.
2. Add boiling water to the drip pan and place under the grill grate.
   Tip: This will add moisture for the cook and collect the drippings .
3. Smoke the pork butts for 2 hours per pound at 225°F, until the meat reaches an internal temperature of 160°F.
   Tip: Maintain a 225°F temperature, check fire hourly or when needed. Also spritz with apple juice every time you add fuel to your fire. Spritzing adds moisture and flavor. It prevents the pork butt from drying out and helps to create the bark. Monitor the temperature using a folding probe thermometer and/or remote thermometer.
4. Remove the pork butts from the smoker and double wrap in foil. Before closing the wrap, add 1 Cup of apple juice and 1 stick of butter for each pork butt, more seasoning and BBQ sauce, to taste.
5. Place back in the smoker and cook until the pork butt reaches an internal temperature of 199°F, then remove from the smoker.
   Tip: Wrap pork butt in a large towel and place in a cooler or just set to the side for a minimum of 1-2 hours for resting. This allows the meat to cook down and stop cooking and is a major key in the process.
6. After resting, remove the towel and foil. Pull apart the pork using two forks or meat claws.
7. Make pulled pork sandwiches and endless pulled pork dishes. Enjoy!

BRISKET

The brisket recipe is a traditional take on the smoked classic, promising tender, smoky results.

Ingredients:

10 ½ lb. beef brisket
½ Cup paprika
¼ Cup packed light brown sugar
3 Tbsp. salt
3 Tbsp. coarse black pepper
3 Tbsp. Chili powder
Apple juice
Water

Instructions:

1. Using a sharp knife, trim the fat from the brisket leaving an even, thin layer on the top.
2. In a medium bowl, combine paprika, light brown sugar, Chili powder, salt and pepper and mix well to make rub seasoning. Using your hands, or a shaker, generously apply rub all over.
3. Wrap the brisket in plastic wrap and refrigerate for at least 12 hours.
4. When setting up the grill, add wood chips/chunks to charcoal and add Smokin' Stone with an aluminum pan on top. Pour apple juice and water into the pan, about halfway full. Place a temperature probe at grate level and heat grill to 220°F.
5. Place brisket on grates, fat side up, and allow to smoke for 5 hours. After 5 hours, wrap the brisket in butcher paper and return to grill at 220°F. Brisket is done when the internal temperature reaches 195°F. Allow the brisket to rest for 1 hour.
6. Slice, serve and enjoy!

3-2-1 RIBS

The 3-2-1 rib method might be something you have seen thrown around on social media. It's a popular technique for smoking ribs that are tender, juicy, and come clean off the bone. Simple and easy to follow, this is a surefire way to guarantee your ribs are finger lickin' good.

The 3-2-1 Method is a process that involves smoking the ribs for three hours, wrapping them in foil and braising for two hours, and the smoking unwrapped for one hour. This not only helps the ribs cook faster, it ensures an even smoke ring, and more tender meat.

Ingredients:

4 Racks of Ribs
2 Cups of Apple Cider, 2 Additional Cups in Spray Bottle
8 Tbsp of Salted Butter
1 Cup of Favorite BBQ Sauce
1 Cup Dark Brown Sugar
Char-Griller® Rib Rub
4 Tbsp Honey

Instructions:

1. Prepare your Char-Griller® Offset Smoker for smoking by starting half a chimney starter of charcoal and adding it to the Side Fire Box. Alternatively, prepare your grill for the indirect method with coals arranged opposite where you plan to place the ribs.
   Tip: Add about half a chimney of unlit charcoal to the Side Fire Box close to the barrel before adding the lit charcoal next to it. The lit charcoal will gradually light the unlit charcoal to help maintain temperature for longer.
2. Add three to four chunks of Apple Wood and close the lid.
3. Allow the grill to heat up to about 200°F.
4. Remove the membrane from the ribs.
   Tip: Start at the narrower end of the rack, carefully work a paring knife under the membrane to get it started, and remove the membrane using a paper towel.
5. Liberally season both sides of the ribs with Char-Griller® Rib Rub.
6. Open the grill and raise the adjustable fire grate to the top level. This ensures even smoke distribution.
7. Place a drip pan(s) full of water under the grates and on top of the fire grate in the main barrel.
8. Place ribs bone side down on the grates, close the lid and allow to smoke for three hours.
   Tip: Place the exposed bone side of the rib rack towards the Side Fire Box to get the meat to pull away from the bone better. If using the indirect method, place ribs opposite the coals.
9. Periodically check the temperature to ensure it is holding steady at 200°F. If you have to add charcoal, only add lit charcoal.
10. Every 30 minutes, spray the ribs with Apple Cider and move the rib rack that is closest to the Side Fire Box to the side of the grill that is furthest from the Side Fire Box and move the other rib racks closer to the Side Fire Box to accommodate. Repeat the spray and rotate method every 30 minutes.
11. Remove ribs from the grill after three hours.
12. Tear off a large sheet of heavy-duty aluminum foil. (One for each rack of ribs.)
13. Place one rack of ribs bone side up on each piece of aluminum foil.
14. Coat the bone side of ribs with brown sugar, honey, and four pats of butter.
15. Pour over ½ cup of apple cider.
16. Fully crimp the edges of the foil together to cover the ribs.
17. Repeat with the other three racks of ribs.
18. Transfer ribs back to the smoker and increase the temperature to 225°F.
19. Do this by opening the dampers a little more and adding another half a chimney of lit charcoal if needed.
20. Allow ribs to braise for two hours.
21. Continue to rotate the ribs as outlined in step 8b to ensure that all of the racks get time close and far away from the fire.
22. Remove the ribs from the grill and foil. Place back on the grill bone side down.
23. Brush ribs with your favorite BBQ sauce and cook for one hour at 225°F.
24. Remove and enjoy!

SMOKED MAC AND CHEESE

An all-time family favorite, this Smoked Mac & Cheese recipe elevates stovetop or oven baked mac & cheese with flavors sure to keep your smoker fired up

Ingredients:

1 Package of Elbow Macaroni
½ Stick of Butter
¼ Cup of All Purpose Flour
1 Cup of Heavy Cream
1 Cup of Milk
2 Cups of Cheddar Cheese (Shredded)
1 Cup of Gouda Cheese (Shredded)
1 Cup of Colby Jack Cheese (Shredded)
½ Cup of Cream Cheese
2 Tbsp of Black Pepper
1 Tsp of Cayenne Pepper
1 Large Cast Iron Skillet

Instructions:

1. Boil elbow macaroni according to package instructions for al dente.
2. Preheat the smoker to 225°F using a fruity hardwood like apple or cherry in the Side Fire Box.
   Tip: If your grill does not ha ve the Side Fire Box attachment, easily turn it into a smoker by arranging coals/wood opposite of where you place the mac and cheese pan. If you place the pan on the right side of the grates, simply place wood on the right side for an indirect cooking experience.
3. Heat the cast iron skillet over medium heat, then melt butter and whisk in flour.
4. While continuing to whisk, add milk and heavy cream bringing to a boil.
5. Reduce to low-medium heat and whisk in cream cheese until smooth.
6. Whisk in the rest of the cheeses continuing to stir until melted and smooth
7. Turn off the heat then stir in macaroni noodles until thoroughly mixed with cheese sauce
8. Place the entire skillet in the smoker and cook for 1-2 hours until desired doneness. Keep in longer for more smoky flavor.
9. Serve hot.

SMOKED STUFFED HOT DOGS

1. Slit hot dogs lengthwise, within 1/4 inch of each end.
2. Stuff hot dogs with cheese and relish and wrap in bacon.
3. Place on cooking grate over drip pan and smoke 15-20 minutes or until bacon is crisp.

SMOKED CHICKEN PARTS AND HALVES

Instructions:

1. Rinse pieces in cold water and pat dry with paper towels.
2. Brush each piece with Olive Oil and season to taste with salt and pepper.
3. Brown pieces directly above coals with lid open and grill on high or medium heat for several minutes.
4. Then place pieces on cooking grate in indirect cooking area.
5. With the grill on low heat, cook with lid down for 55 to 60 minutes or until done. Do not use Olive Oil or salt and pepper if using marinade

SMOKED BAKED HAM:

You can smoke fully cooked canned ham or smoked and cured whole ham or shank or butt portion.

Glaze

1 cup of Light Brown Sugar, firmly packed
1/2 cup Orange Juice
1/2 cup Honey

Instructions:

1. Combine sugar, juice and honey. Let glaze sit for at least 4 hours.
2. Remove rind and score fat diagonally to give a diamond effect.
3. Insert a whole clove into the center of every diamond.
4. Place ham with fat side up in center of cooking grate. Close lid.
5. About 9 minutes per pound is suggested for fully cooked hams. Smoked or cured ham, which is not fully cooked, should be cooked to an internal temperature of 160°F.
6. Baste with ham glaze 3 or 4 times during last 30 minutes of cooking time.
7. Garnish with pineapple rings about 15 minutes before end of cooking time.

SMOKED TURKEY

Instructions:

1. Empty cavity rinse and pat dry with paper towel.
2. Tuck wing tips under the back and tie legs together.
3. Place in center of cooking grate directly above foil drip pan of water.
4. Smoke for 12 minutes per pound. Allow several extra minutes per pound if stuffed to allow for expansion.
5. Use a meat thermometer for best results (190°F internal).

SMOKED VENISON WITH BACON

Venison Marinade

1 cup Balsamic or Red Wine Vinegar
1 cup Olive Oil
2 oz. Worcestershire
½ oz. Tabasco
2 Tbsp. Seasoning Salt
1-2 Chopped Jalapeños
3 oz. Soy Sauce

Bacon Marinade

2 oz. Red Wine Vinegar
2 oz. Worcestershire 4 dashes Tabasco

Instructions:

1. Place leg of venison in a container and marinate for 2-4 days, turning daily.
2. Leave bacon to marinate overnight.
3. Remove leg from refrigerator at least an hour before cooking.
4. Season generously with seasoned salt and coarse ground black pepper.
5. Wrap 1 lb. bacon over the top of the leg, and smoke 20-25 minutes per pound, or until tender.
6. Do not overcook.

Marinades

CHICKEN MARINADE

Ingredients:

½ Cup Soy Sauce
¼ Cup Olive Oil
¼ Cup Red Wine Vinegar
1 Tsp Oregano
½ Tsp Sweet Basil
½ Tsp Garlic Powder with Parsley
¼ Tsp Pepper

Instructions:

1. Pour over chicken pieces in non-metal dish
2. Cover and refrigerate overnight, turning occasionally. Use marinade to baste chicken while cooking.

MEAT MARINADE: (For steaks, chops, and burgers)

Ingredients:

¼ Cup Soy Sauce
2 Large Onions
2 Garlic Cloves, crushed
2 Tsp Salt
2 Tsp Paprika
1 Tsp Fresh Ground Pepper

Instructions:

1. Combine ingredients in an electric blender, cover, and process at high speed 1 minute or until mixture is very smooth.
2. Allow meat to stand in marinade at room temperature for 2 hours or refrigerate up to 24 hours in a covered dish.
3. Bring meat to room temperature before cooking.

SHISH KABOB MARINADE

Ingredients:

1 Cup Soy Sauce
½ Cup Brown Sugar
½ Cup White Vinegar
½ Cup Pineapple Juice
2 Tsp Salt
½ Tsp Garlic Powder

Instructions:

1. Mix all ingredients together.
2. Marinate beef in mixture a minimum of 4 hours.

FAVORITE ACCESSORIES

FOR THE FULL LINE OF ACCESSORIES VISIT **CHARGRILLER.COM**

Custom Fit Cover
Weather Resistant
Protects Grill Finish

Check **chargriller.com** for your grill's custom fit cover

Quick Release Chimney Starter
E-Z starter with patened Trigger release
ABS handle with heat shield
Zinc coated galvanized steel
Makes starting charcoal grill fast and easy

Model #9586

Apron
Machine Washable
Two Front Pockets
Adjustable Straps

Model #8805

Folding Probe Thermometer
Stainless steel
fast-read probe accurately measures temperature
Easily switch from °F to °C
Auto ON/OFF feature for extended battery life

Model #6304

Char-Griller® Trucker Hat
Cotton-poly blended front
Nylon mesh back
Adjustable snapback closure
One Size Fits Most

Model #70100

Original All-Purpose BBQ Rub
Pairs well with all types of meat and fish

Model #85501

This Page Intentionally Left Blank

Char Griller®
Premier Specialty Brands, LLC,
5367 New Peachtree Road, Suite 150,
Chamblee, GA 30341
www.chargriller.com/pages/customer-support